SITE PLAN APPROVED

PLANNING BOARD CHAIRMAN

SMALL RETAIL DEVELOPMENT

SOUTH HADLEY SQUARE

WILLIMANSETT ST (RT 33) & OLD LYMAN RD
SOUTH HADLEY, MA 01075

GENERAL NOTES

1. THE CONTRACTOR SHALL GIVE ALL NOTICES AND COMPLY WITH ALL LAWS, ORDINANCES, RULES, REGULATIONS AND LAWFUL ORDERS OF ANY PUBLIC AUTHORITY, MUNICIPAL AND UTILITY COMPANY SPECIFICATIONS, AND LOCAL AND STATE JURISDICTIONAL CODES BEARING ON THE PERFORMANCE OF THE WORK. THE WORK PERFORMED ON THE PROJECT AND THE MATERIALS INSTALLED SHALL BE IN STRICT ACCORDANCE WITH ALL APPLICABLE CODES, REGULATIONS, AND ORDINANCES.
2. THE ARCHITECT/ENGINEER HAVE MADE EVERY EFFORT TO SET FORTH IN THE CONSTRUCTION AND CONTRACT DOCUMENTS THE COMPLETE SCOPE OF WORK. THE CONTRACTOR BIDDING THE JOB IS NEVERTHELESS CAUTIONED THAT MINOR OMISSIONS OR ERRORS IN THE DRAWINGS AND OR SPECIFICATIONS SHALL NOT EXCUSE SAID CONTRACTOR FROM COMPLETING THE PROJECT AND IMPROVEMENTS IN ACCORDANCE WITH THE INTENT OF THESE DOCUMENTS.
3. THE CONTRACTOR OR BIDDER SHALL BEAR THE RESPONSIBILITY OF NOTIFYING (IN WRITING) THE PROJECT OWNER'S REPRESENTATIVE OF ANY CONFLICTS, ERRORS, OR OMISSIONS PRIOR TO THE SUBMISSION OF CONTRACTOR'S PROPOSAL OR PERFORMANCE OF WORK. IN THE EVENT OF DISCREPANCIES THE CONTRACTOR SHALL PRICE THE MORE COSTLY OR EXTENSIVE WORK, UNLESS DIRECTED IN WRITING OTHERWISE.
4. THE SCOPE OF WORK SHALL INCLUDE FURNISHING ALL MATERIALS, EQUIPMENT, LABOR AND ALL OTHER MATERIALS AND LABOR DEEMED NECESSARY TO COMPLETE THE WORK/PROJECT AS DESCRIBED HEREIN.
5. THE CONTRACTOR SHALL VISIT THE JOB SITE PRIOR TO THE SUBMISSION OF BIDS OR PERFORMING WORK TO FAMILIARIZE HIMSELF WITH THE FIELD CONDITIONS AND TO VERIFY THAT THE PROJECT CAN BE CONSTRUCTED IN ACCORDANCE WITH THE CONTRACT DOCUMENTS.
6. THE CONTRACTOR SHALL OBTAIN AUTHORIZATION TO PROCEED WITH CONSTRUCTION PRIOR TO STARTING WORK ON ANY ITEM NOT CLEARLY DEFINED BY THE CONSTRUCTION DRAWINGS / CONTRACT DOCUMENTS.
7. THE CONTRACTOR SHALL INSTALL ALL EQUIPMENT AND MATERIALS ACCORDING TO THE MANUFACTURER'S / VENDOR'S SPECIFICATIONS UNLESS NOTED OTHERWISE OR WHERE LOCAL CODES OR ORDINANCES TAKE PRECEDENCE.
8. THE CONTRACTOR SHALL PROVIDE A FULL SET OF CONSTRUCTION DOCUMENTS AT THE SITE UPDATED WITH THE LATEST REVISIONS AND ADDENDUMS OR CLARIFICATIONS AVAILABLE FOR THE USE BY ALL PERSONNEL INVOLVED WITH THE PROJECT.
9. THE CONTRACTOR SHALL SUPERVISE AND DIRECT THE PROJECT DESCRIBED HEREIN. THE CONTRACTOR SHALL BE SOLELY RESPONSIBLE FOR ALL CONSTRUCTION MEANS, METHODS, TECHNIQUES, SEQUENCES AND PROCEDURES AND FOR COORDINATING ALL PORTIONS OF THE WORK UNDER THE CONTRACT.
10. THE CONTRACTOR IS RESPONSIBLE FOR PROVIDING ALL NECESSARY CONSTRUCTION CONTROL SURVEYS, ESTABLISHING AND MAINTAINING ALL LINES AND GRADES REQUIRED TO CONSTRUCT ALL IMPROVEMENTS AS SHOWN HEREIN.
11. THE CONTRACTOR SHALL BE RESPONSIBLE FOR OBTAINING ALL PERMITS AND INSPECTIONS WHICH MAY BE REQUIRED FOR THE WORK BY THE ARCHITECT/ENGINEER, THE STATE, COUNTY OR LOCAL GOVERNMENT AUTHORITY.
12. THE CONTRACTOR SHALL MAKE NECESSARY PROVISIONS TO PROTECT EXISTING IMPROVEMENTS, EASEMENTS, PAVING, CURBING, ETC. DURING CONSTRUCTION. UPON COMPLETION OF WORK, THE CONTRACTOR SHALL REPAIR ANY DAMAGE THAT MAY HAVE OCCURRED DUE TO CONSTRUCTION ON OR ABOUT THE PROPERTY.
13. THE CONTRACTOR SHALL KEEP THE GENERAL WORK AREA CLEAN AND HAZARD FREE DURING CONSTRUCTION AND DISPOSE OF ALL DIRT, DEBRIS, RUBBISH AND REMOVE EQUIPMENT NOT SPECIFIED AS REMAINING ON THE PROPERTY. PREMISES SHALL BE LEFT IN CLEAN CONDITION AND FREE FROM PAINT SPOTS, DUST, OR SMUDGES OF ANY NATURE.
14. THE CONTRACTOR SHALL COMPLY WITH ALL OSHA REQUIREMENTS AS THEY APPLY TO THIS PROJECT.
15. THE CONTRACTOR SHALL NOTIFY THE PROJECT OWNER'S REPRESENTATIVE WHERE A CONFLICT OCCURS ON ANY OF THE CONTRACT DOCUMENTS. THE CONTRACTOR IS NOT TO ORDER MATERIAL OR CONSTRUCT ANY PORTION OF THE WORK THAT IS IN CONFLICT UNTIL CONFLICT IS RESOLVED BY THE PROJECT OWNER'S REPRESENTATIVE.
16. THE CONTRACTOR SHALL VERIFY ALL DIMENSIONS, ELEVATIONS, PROPERTY LINES, ETC. ON THE JOB.
17. ALL UNDERGROUND UTILITY INFORMATION WAS DETERMINED FROM SURFACE INVESTIGATIONS AND EXISTING PLANS OF RECORD. THE CONTRACTOR SHALL LOCATE ALL UNDERGROUND UTILITIES IN THE FIELD PRIOR TO ANY SITE WORK. CALL DIG-SAFE AT 1-888-DIG SAFE (1-888-344-7233) A MINIMUM OF 72 HOURS PRIOR TO PLANNED ACTIVITY.

VICINITY MAP

NOT TO SCALE

TRUE NORTH

SHEET INDEX

SHT. NO.	DESCRIPTION	REV. NO.
T-1	TITLE SHEET	1
C-1	EXISTING CONDITIONS PLAN	1
C-2	LAYOUT & MATERIALS PLAN	1
C-3	GRADING PLAN	1
C-4	LANDSCAPE PLAN	1
A-1	CONSTRUCTION NOTES	1
A-2	DETAILS	1
A-3	DETAILS	1
A-4	DETAILS	1
L-1	LUMINARY PLAN	1
	ARCHITECTURAL RENDERING	

PROJECT SUMMARY

SITE NUMBER:	CVL-12-024
SITE NAME:	SOUTH HADLEY SQUARE
SITE ADDRESS:	WILLIMANSETT ST (RT 33) & OLD LYMAN ROAD SOUTH HADLEY, MA
ASSESSOR'S MAP & LOT #:	MAP: 14 LOT: 66
CURRENT OWNER	KHC-SOUTH HADLEY ASSOCIATES, LLC C/O AVR REALTY COMPANY, LLC 1 EXECUTIVE BOULEVARD, 4TH FLOOR YONKERS, NY 10701
DEED BOOK/PAGE:	5245-294
CONSTRUCTION TYPE:	6000 SF RETAIL
PREPARED FOR:	BRIAN FERRUGGIARI, DIR. OF PUBLIC AFFAIRS KHC-SOUTH HADLEY ASSOCIATES, LLC C/O AVR REALTY COMPANY, LLC 1 EXECUTIVE BOULEVARD, 4TH FLOOR YONKERS, NY 10701
SOUTH HADLEY PLANNING BOARD:	JEFF SQUIRE - CHAIR MARK CAVANAUGH - VICE CHAIR HELEN FANTINI - CLERK JOAN ROSNER - FINANCIAL SECRETARY MELISSA O'BRIEN - MEMBER

DO NOT SCALE DRAWINGS

CONTRACTOR SHALL VERIFY ALL PLANS AND EXISTING DIMENSIONS AND CONDITIONS ON THE JOB SITE AND SHALL IMMEDIATELY NOTIFY THE PROJECT OWNER'S REPRESENTATIVE IN WRITING OF DISCREPANCIES BEFORE PROCEEDING WITH THE WORK OR BE RESPONSIBLE FOR SAME.

Hudson Design Group LLC
116 PLEASANT STREET
SUITE 302-A
P.O. BOX 692
EASTHAMPTON, MA 01027
TEL: (413) 588-8139
FAX: (413) 517-0590

PROJECT NO:	CVL-12-024
DRAWN BY:	SB
CHECKED BY:	MM

SUBMITTALS

1	09-12-13	FINAL CONCEPT
0	05-30-13	ORIGINAL CONCEPT

CVL-12-024
SOUTH HADLEY SQUARE RETAIL DEVELOPMENT

SHEET TITLE

TITLE SHEET

SHEET NUMBER

T-1

SITE PLAN APPROVED

PLANNING BOARD CHAIRMAN

WILLIMANSETT STREET - ROUTE 33

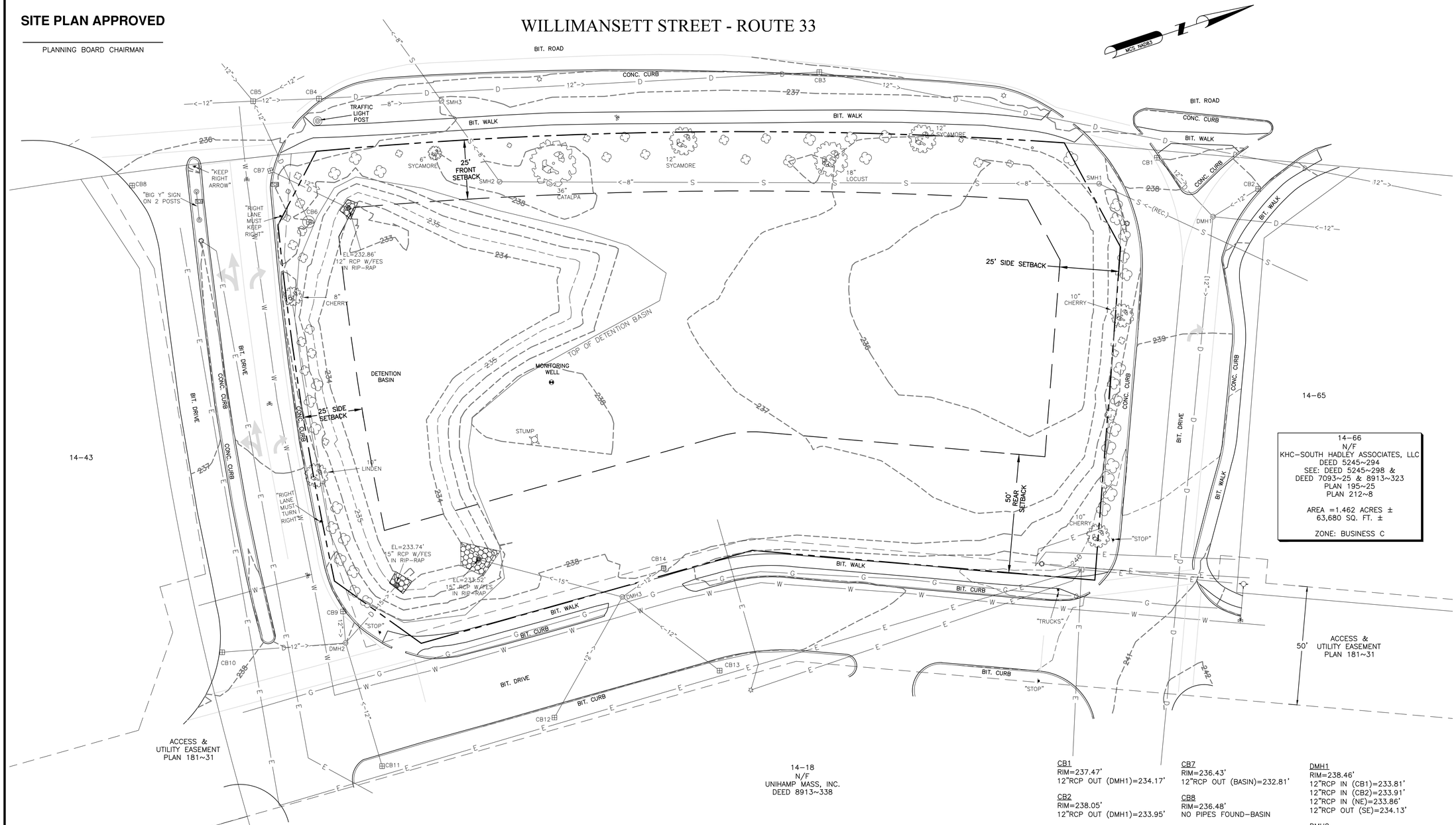

NOTES:

1. FIELD SURVEY BY EDM TOTAL STATION.

2. THE HORIZONTAL DATUM OF THIS PLAN IS MCS NAD83, THE VERTICAL DATUM IS NGVD88, & ARE BASED ON A GPS SURVEY USING POST-PROCESSED DUAL FREQUENCY GPS DATA.

3. THE LOCATIONS OF UTILITIES SHOWN HEREON ARE THE RESULT OF SURFACE EVIDENCE AS LOCATED BY FIELD SURVEY, AND PLANS OF RECORD. THIS PLAN DOES NOT NECESSARILY DEPICT THE EXACT LOCATION OF THESE UTILITIES AND MAY NOT SHOW ALL OF THE UTILITIES WHICH EXIST WITHIN THE PREMISES SURVEYED. CONTACT DIG-SAFE AT 1-888-344-7233 BEFORE EXCAVATION.

LEGEND

N/F	NOW OR FORMERLY	D	DRAIN		LOCUS PROPERTY LINE
CONC.	CONCRETE	C	COMMUNICATION		ABUTTING PROPERTY LINE
BIT.	BITUMINOUS CONCRETE	E	ELECTRIC		EASEMENT LINE
	LIGHT POST	G	GAS	U	UNDERGROUND UTILITY LINE
	POST	S	SEWER		MAJOR CONTOUR LINE
	CATCH BASIN	W	WATER		MINOR CONTOUR LINE
	PIPE OUTLET		MANHOLE		WHITE PAINTED LINE
	DECIDUOUS TREE		METER		YELLOW PAINTED LINE
	CONIFEROUS TREE		BOX		
	SHRUB/BUSH		GAS/WATER GATE		

CB1
RIM=237.47'
12"RCP OUT (DMH1)=234.17'

CB2
RIM=238.05'
12"RCP OUT (DMH1)=233.95'

CB3
RIM=235.86'
12"RCP IN (CB4)=231.86'
12"RCP OUT (NE)=231.86'

CB4
RIM=235.31'
12"RCP IN (CB5)=230.11'
12"RCP OUT (CB4)=230.01'

CB5
RIM=235.11'
12"RCP IN (CB6)=230.06'
12"RCP IN (S)=230.16'
12"RCP IN (SW)=229.96'
12"RCP IN (NW)=230.11'
12"RCP OUT (CB4)=229.76'

CB6
RIM=237.17'
12"RCP OUT (CB5)=230.55'

CB7
RIM=236.43'
12"RCP OUT (BASIN)=232.81'

CB8
RIM=236.48'
NO PIPES FOUND-BASIN

CB9
RIM=237.86'
12"RCP OUT (DMH2)=233.82'

CB10
RIM=237.81'
12"RCP OUT (DMH2)=234.04'

CB11
RIM=238.33'
12"RCP OUT (DMH2)=233.95'

CB12
RIM=238.48'
12"RCP OUT (DMH3)=N/A

CB13
RIM=238.83'
12"RCP OUT (DMH3)=233.78'

CB14
RIM=238.40'
12"RCP OUT (DMH3)=233.86'

DMH1
RIM=238.46'
12"RCP IN (CB1)=233.81'
12"RCP IN (CB2)=233.91'
12"RCP IN (NE)=233.86'
12"RCP OUT (SE)=234.13'

DMH2
RIM=238.00'
12"RCP IN (CB11)=233.60'
12"RCP IN (CB10)=233.80'
12"RCP IN (CB9)=233.73'
15"RCP OUT (BASIN)=233.48'

DMH3
RIM=238.19'
12"RCP IN (CB14)=233.85'
12"RCP IN (CB13)=233.81'
12"RCP IN (CB12)=234.04'
15'RCP OUT (BASIN)=233.91'

SMH1
RIM=237.74'
BACKED UP-PIPES NOT VISIBLE

SMH2
RIM=238.21'
8"PVC IN (SMH1)=231.56'
8"PVC OUT (SMH3)=231.47'

SMH3
RIM=237.22'
8"PVC IN (SMH2)=230.97'
8"PVC IN (S)=230.42'
8"PVC OUT (SW)=230.16'

EXISTING CONDITIONS PLAN

SCALE: 1" = 20'

0' 20' 40' 60'

0 10 20 40 60 80 FEET

Hudson Design Group LLC
116 PLEASANT STREET
SUITE 302-A
P.O. BOX 692
EASTHAMPTON, MA 01027
TEL: (413) 588-8139
FAX: (413) 517-0590

IN ASSOCIATION WITH:
NORTHEAST SURVEY CONSULTANTS
116 PLEASANT ST. SUITE 302
P.O. BOX 109
EASTHAMPTON, MA 01027
(413) 203-5144

PROJECT NO:	CVL-12-024
DRAWN BY:	SB
CHECKED BY:	MM

SUBMITTALS

1	09-12-13	FINAL CONCEPT
0	05-30-13	ORIGINAL CONCEPT

CVL-12-024
SOUTH HADLEY SQUARE RETAIL DEVELOPMENT

SHEET TITLE
EXISTING CONDITIONS PLAN

SHEET NUMBER
C-1

SITE PLAN APPROVED

PLANNING BOARD CHAIRMAN

WILLIMANSETT STREET - ROUTE 33

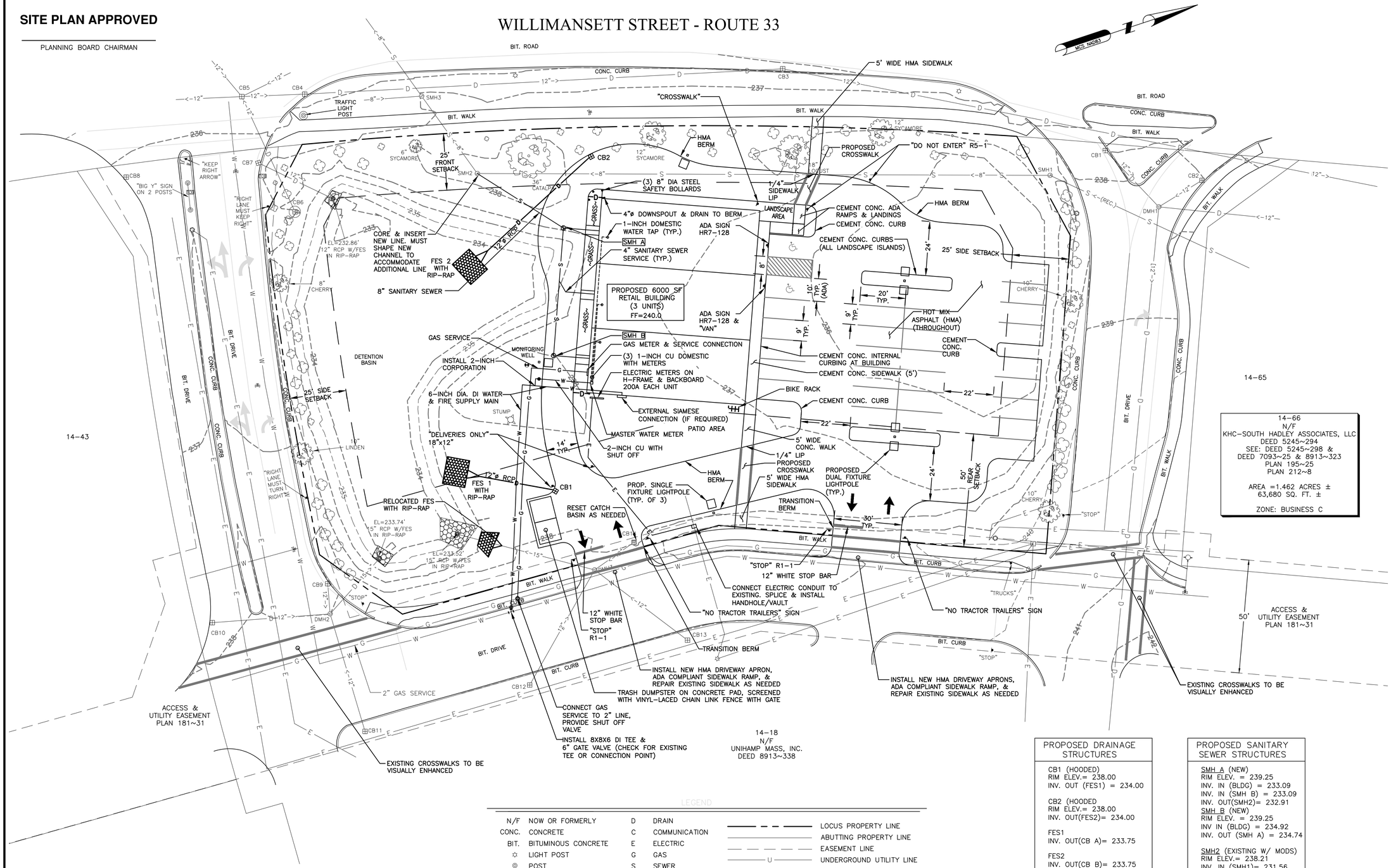

TABLE OF DIMENSIONAL REQUIREMENTS - ZONE- BUSINESS C			
	REQUIRED	EXISTING	PROPOSED
MINIMUM LOT AREA	20,000 SF	63,680 SF	63,380 SF
MINIMUM LOT FRONTAGE	100 FT	315.71'	315.71'
MAXIMUM LOT COVERAGE	50%	N/A	9.4%
MINIMUM FRONT YARD SETBACK	25'	25'	31.5'
MINIMUM SIDE YARD SETBACK	25'	25'	127.2'&118.0'
MINIMUM REAR YARD SETBACK	50'	50'	54.0'
MAXIMUM BUILDING HEIGHT	35'	N/A	<35'
MAXIMUM BUILDING COVERAGE	65,000 SF	N/A	6,000 SF

LEGEND

N/F	NOW OR FORMERLY	D	DRAIN
CONC.	CONCRETE	C	COMMUNICATION
BIT.	BITUMINOUS CONCRETE	E	ELECTRIC
	LIGHT POST	G	GAS
	POST	S	SEWER
	CATCH BASIN	W	WATER
	PIPE OUTLET		MANHOLE
	DECIDUOUS TREE		METER
	CONIFEROUS TREE		BOX
	SHRUB/BUSH		GAS/WATER GATE

LOCUS PROPERTY LINE
ABUTTING PROPERTY LINE
EASEMENT LINE
UNDERGROUND UTILITY LINE
MAJOR CONTOUR LINE
MINOR CONTOUR LINE
WHITE PAINTED LINE
YELLOW PAINTED LINE

LAYOUT & MATERIALS PLAN

SCALE: 1" = 20'

0 10 20 40 60 80 FEET

PROPOSED DRAINAGE STRUCTURES

CB1 (HOODED)
RIM ELEV.= 238.00
INV. OUT (FES1) = 234.00

CB2 (HOODED)
RIM ELEV.= 238.00
INV. OUT(FES2)= 234.00

FES1
INV. OUT(CB A)= 233.75

FES2
INV. OUT(CB B)= 233.75

PROPOSED SANITARY SEWER STRUCTURES

SMH A (NEW)
RIM ELEV. = 239.25
INV. IN (BLDG) = 233.09
INV. IN (SMH B) = 233.09
INV. OUT(SMH2)= 232.91

SMH B (NEW)
RIM ELEV. = 239.25
INV IN (BLDG) = 234.92
INV. OUT (SMH A) = 234.74

SMH2 (EXISTING W/ MODS)
RIM ELEV.= 238.21
INV. IN (SMH1)= 231.56
INV. IN (SMH A)= 231.56
INV. OUT (SMH3) = 231.47

NOTE: FIELD ADJUST AS NECESSARY TO ENSURE ALL SANITARY MAIN AND SERVICE LINES ARE SLOPED AT MINIMUM OF 3%. FIELD ADJUST FRAMES & COVERS AS NECESSARY FOR SMOOTH UNIFORM PAVEMENT SLOPES.

Hudson Design Group LLC
116 PLEASANT STREET
SUITE 302-A
P.O. BOX 692
EASTHAMPTON, MA 01027
TEL: (413) 588-8139
FAX: (413) 517-0590

PROJECT NO: CVL-12-024

DRAWN BY: SB

CHECKED BY: MM

SUBMITTALS

1	09-12-13	FINAL CONCEPT
0	05-30-13	ORIGINAL CONCEPT

CVL-12-024
SOUTH HADLEY SQUARE RETAIL DEVELOPMENT

SHEET TITLE

LAYOUT & MATERIALS PLAN

SHEET NUMBER

C-2

SITE PLAN APPROVED

PLANNING BOARD CHAIRMAN

WILLIMANSETT STREET - ROUTE 33

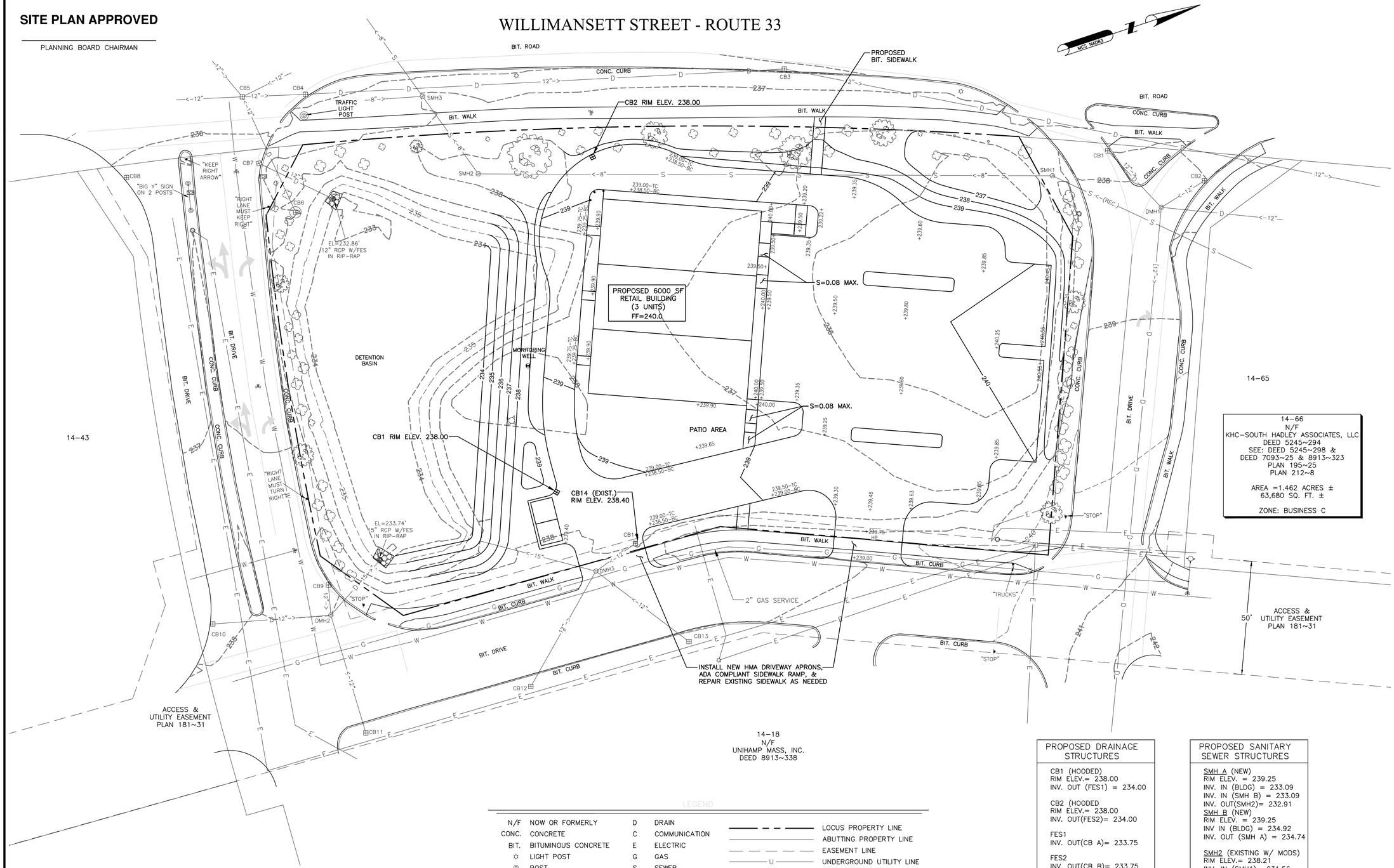

TABLE OF DIMENSIONAL REQUIREMENTS - ZONE- BUSINESS C

	REQUIRED	EXISTING	PROPOSED
MINIMUM LOT AREA	20,000 SF	63,680 SF	63,380 SF
MINIMUM LOT FRONTAGE	100 FT	315.71'	315.71'
MAXIMUM LOT COVERAGE	50%	N/A	9.4%
MINIMUM FRONT YARD SETBACK	25'	25'	31.5'
MINIMUM SIDE YARD SETBACK	25'	25'	127.2'&118.0'
MINIMUM REAR YARD SETBACK	50'	50'	54.0'
MAXIMUM BUILDING HEIGHT	35'	N/A	<35'
MAXIMUM BUILDING COVERAGE	65,000 SF	N/A	6,000 SF

LEGEND

N/F	NOW OR FORMERLY	D	DRAIN
CONC.	CONCRETE	C	COMMUNICATION
BIT.	BITUMINOUS CONCRETE	E	ELECTRIC
	LIGHT POST	G	GAS
	POST	S	SEWER
	CATCH BASIN	W	WATER
	PIPE OUTLET		MANHOLE
	DECIDUOUS TREE		METER
	CONIFEROUS TREE		BOX
	SHRUB/BUSH		GAS/WATER GATE

LOCUS PROPERTY LINE
ABUTTING PROPERTY LINE
EASEMENT LINE
UNDERGROUND UTILITY LINE
MAJOR CONTOUR LINE
MINOR CONTOUR LINE
WHITE PAINTED LINE
YELLOW PAINTED LINE

GRADING PLAN

SCALE: 1" = 20'

0 10 20 40 60 80 FEET

PROPOSED DRAINAGE STRUCTURES

CB1 (HOODED)
RIM ELEV.= 238.00
INV. OUT (FES1) = 234.00

CB2 (HOODED)
RIM ELEV.= 238.00
INV. OUT(FES2)= 234.00

FES1
INV. OUT(CB A)= 233.75

FES2
INV. OUT(CB B)= 233.75

PROPOSED SANITARY SEWER STRUCTURES

SMH A (NEW)
RIM ELEV. = 239.25
INV. IN (BLDG) = 233.09
INV. IN (SMH B) = 233.09
INV. OUT(SMH2)= 232.91

SMH B (NEW)
RIM ELEV. = 239.25
INV IN (BLDG) = 234.92
INV. OUT (SMH A) = 234.74

SMH2 (EXISTING W/ MODS)
RIM ELEV.= 238.21
INV. IN (SMH1)= 231.56
INV. IN (SMH A)= 231.56
INV. OUT (SMH3) = 231.47

NOTE: FIELD ADJUST AS NECESSARY TO ENSURE ALL SANITARY MAIN AND SERVICE LINES ARE SLOPED AT MINIMUM OF 3%. FIELD ADJUST FRAMES & COVERS AS NECESSARY FOR SMOOTH UNIFORM PAVEMENT SLOPES.

Hudson Design Group LLC
116 PLEASANT STREET
SUITE 302-A
P.O. BOX 692
EASTHAMPTON, MA 01027
TEL: (413) 588-8139
FAX: (413) 517-0590

PROJECT NO: CVL-12-024

DRAWN BY: SB

CHECKED BY: MM

SUBMITTALS

1	09-12-13	FINAL CONCEPT
0	05-30-13	ORIGINAL CONCEPT

CVL-12-024
SOUTH HADLEY SQUARE RETAIL DEVELOPMENT

SHEET TITLE

GRADING PLAN

SHEET NUMBER

C-3

SITE PLAN APPROVED

PLANNING BOARD CHAIRMAN

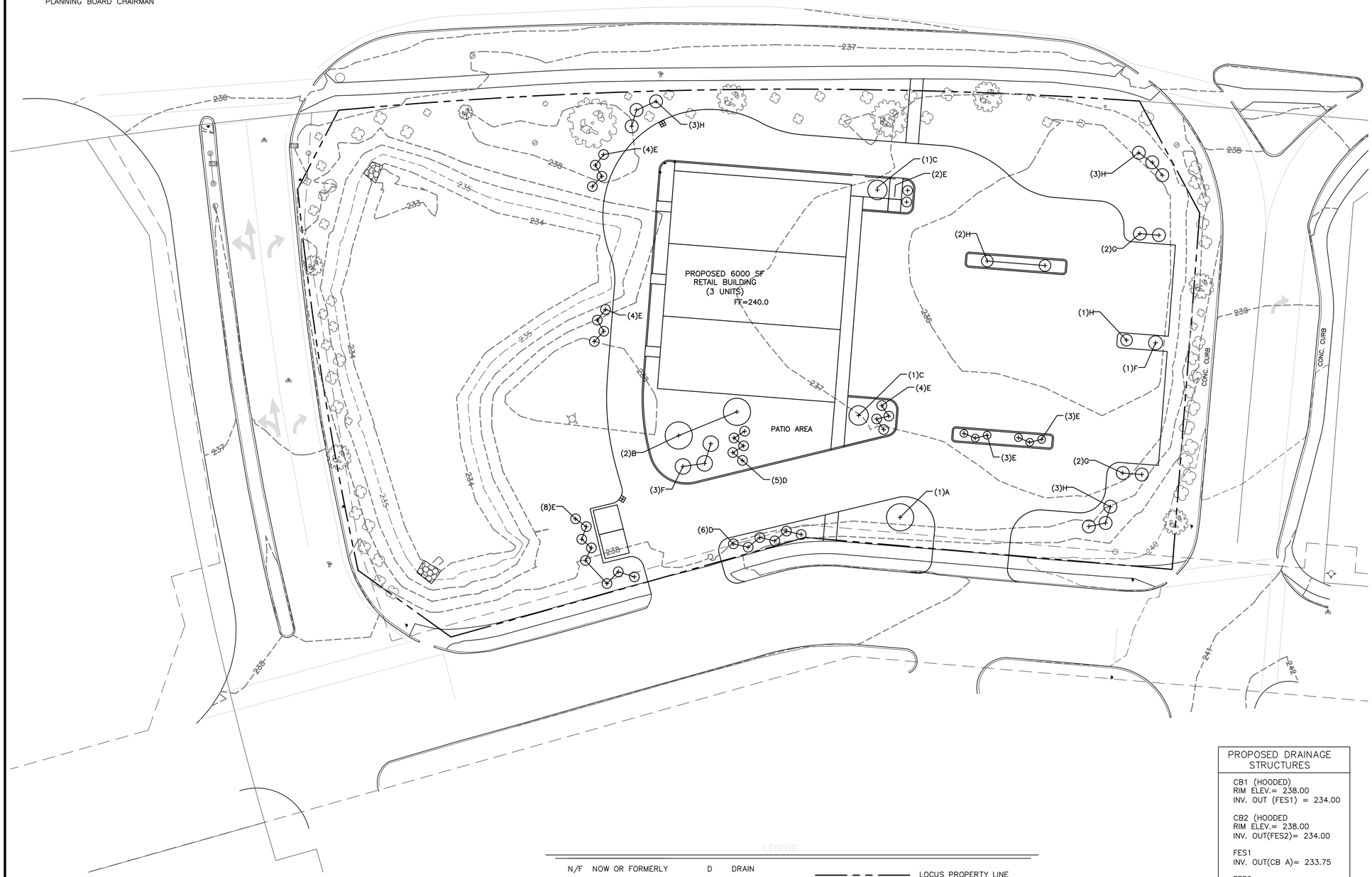

PROPOSED DRAINAGE STRUCTURES
CB1 (HOODED) RIM ELEV.= 238.00 INV. OUT (FES1) = 234.00 CB2 (HOODED RIM ELEV.= 238.00 INV. OUT(FES2)= 234.00 FES1 INV. OUT(CB A)= 233.75 FES2 INV. OUT(CB B)= 233.75

PROPOSED SANITARY SEWER STRUCTURES
SMH A (NEW) RIM ELEV. = 239.25 INV. IN (BLDG) = 233.09 INV. IN (SMH B) = 233.09 INV. OUT(SMH2)= 232.91 SMH B (NEW) RIM ELEV. = 239.25 INV IN (BLDG) = 234.92 INV. OUT (SMH A) = 234.74 SMH2 (EXISTING W/ MODS) RIM ELEV.= 238.21 INV. IN (SMH1)= 231.56 INV. IN (SMH A)= 231.56 INV. OUT (SMH3) = 231.47

NOTE: FIELD ADJUST AS NECESSARY TO ENSURE ALL SANITARY MAIN AND SERVICE LINES ARE SLOPED AT MINIMUM OF 3%. FIELD ADJUST FRAMES & COVERS AS NECESSARY FOR SMOOTH UNIFORM PAVEMENT SLOPES.

LEGEND

N/F	NOW OR FORMERLY	D	DRAIN
CONC.	CONCRETE	C	COMMUNICATION
BIT.	BITUMINOUS CONCRETE	E	ELECTRIC
	LIGHT POST	G	GAS
	POST	S	SEWER
	CATCH BASIN	W	WATER
	PIPE OUTLET		MANHOLE
	DECIDUOUS TREE		METER
	CONIFEROUS TREE		BOX
	SHRUB/BUSH		GAS/WATER GATE

LOCUS PROPERTY LINE
ABUTTING PROPERTY LINE
EASEMENT LINE
UNDERGROUND UTILITY LINE
MAJOR CONTOUR LINE
MINOR CONTOUR LINE
WHITE PAINTED LINE
YELLOW PAINTED LINE

LANDSCAPE PLAN

SCALE: 1" = 20'

0 10 20 40 60 80 FEET

TABLE OF DIMENSIONAL REQUIREMENTS - ZONE- BUSINESS C			
	REQUIRED	EXISTING	PROPOSED
MINIMUM LOT AREA	20,000 SF	63,680 SF	63,380 SF
MINIMUM LOT FRONTAGE	100 FT	315.71'	315.71'
MAXIMUM LOT COVERAGE	50%	N/A	9.4%
MINIMUM FRONT YARD SETBACK	25'	25'	31.5'
MINIMUM SIDE YARD SETBACK	25'	25'	127.2'&118.0'
MINIMUM REAR YARD SETBACK	50'	50'	54.0'
MAXIMUM BUILDING HEIGHT	35'	N/A	<35'
MAXIMUM BUILDING COVERAGE	65,000 SF	N/A	6,000 SF

PLANTING SCHEDULE				
KEY	BOTANICAL NAME	COMMON NAME	QTY	SIZE
A	ACER RUBRUM 'OCTOBER GLORY'	RED MAPLE	1	2-1/2" CAL.
B	MALUS FLORIBUNDA	JAPANESE FLOWERING CRABAPPLE	2	2-1/2" CAL.
C	ACER PALMATUM	JAPANESE MAPLE ATROLINEARE	2	2-1/2" CAL.
D	TAXUS CUSPIDATA 'COW SPREAD'	JAPANESE YEW, LOW SPREAD	11	18"-24"
E	THUJA OCCIDENTALIS 'SMARAGD'	SMARAGD ARBORVITAE	28	18"-24"
F	THUJA OCCIENTALIS 'GOLDEN GLOBE'	GOLDEN ARBORVITAE	4	18"-24"
G	WEIGELA FLORIDA 'MINUET'	MINUET WEIGELA	4	18"-24"
H	FORSYTHIA SUSPENSA	WEEPING FORSYTHIA	12	18"-24"

Hudson Design Group LLC

116 PLEASANT STREET
SUITE 302-A
P.O. BOX 692
EASTHAMPTON, MA 01027

TEL: (413) 588-8139
FAX: (413) 517-0590

PROJECT NO: CVL-12-024

DRAWN BY: SB

CHECKED BY: MM

SUBMITTALS

1	09-12-13	FINAL CONCEPT
0	05-30-13	ORIGINAL CONCEPT

CVL-12-024
SOUTH HADLEY SQUARE RETAIL DEVELOPMENT

SHEET TITLE

LANDSCAPE PLAN

SHEET NUMBER

C-4

SITE PLAN APPROVED

PLANNING BOARD CHAIRMAN

GENERAL NOTES

1. ALL EXCAVATION SHALL COMPLY WITH OSHA'S LATEST STANDARDS. ALL REQUIREMENTS OF OSHA'S EXCAVATION STANDARDS SHALL BE PROVIDED BY THE CONTRACTOR INCLUDING, BUT NOT LIMITED TO, THE PROVISION FOR A COMPETENT PERSON ON SITE AND ANY REQUIRED DOCUMENTATION THAT MAY REQUIRE CERTIFICATION BY A PROFESSIONAL ENGINEER. THE TOWN, OR CONTRACTED ENGINEER, SHALL EXPRESSLY NOT PROVIDE ANY OF THE ABOVE REQUIREMENTS DESIGNATED BY OSHA'S EXCAVATION STANDARD.
2. THE CONTRACTOR SHALL SUBMIT AN ESTIMATED CONSTRUCTION SCHEDULE RELATING TO THE RECOMMENDED SEQUENCE OF CONSTRUCTION. THE SUGGESTED SEQUENCE OF CONSTRUCTION HAS BEEN PROVIDED AS A GENERAL REFERENCE TO ASSURE THE REQUIRED COMPLIANCE WITH TECHNICAL STANDARDS AND WITH REQUIREMENTS OF THE PERMITTING AGENCIES. THE CONTRACTOR MAY PROVIDE AN ALTERNATE SEQUENCE OF CONSTRUCTION CLEARLY DESCRIBING HIS MATERIALS, TECHNIQUES AND TIME FRAMES FOR APPROVAL BY THE ENGINEER.
3. GENERALLY, THE CONTRACTOR'S STAGING AREA FOR ACCESS, STORAGE OF SURPLUS MATERIALS AND EQUIPMENT IS LIMITED TO THE BOUNDED PROPERTY LINE. NO WORK, STOCKPILE OF MATERIALS, STORAGE OF EQUIPMENT, OR OTHER OPERATIONS OF THE CONTRACTOR SHALL TAKE PLACE OUTSIDE OF THESE AREAS OR ON THE ABUTTING PROPERTIES UNLESS SPECIFICALLY AUTHORIZED BY ABUTTING PROPERTY OWNER. THE CONTRACTOR AT HIS OWN EXPENSE SHALL REPAIR ANY DISTURBANCE OF THESE AREAS.
4. THE UTILITIES SHOWN ARE NOT GUARANTEED AS TO THEIR ACCURACY OR COMPLETENESS. IT SHALL BE THE RESPONSIBILITY OF THE CONTRACTOR TO LOCATE ALL EXISTING UTILITIES IN THE FIELD. IT IS REQUIRED THAT THE CONTRACTOR CONTACT DIG–SAFE (1–888–344–7233) AT LEAST 72 HOURS PRIOR TO CONSTRUCTION. NO EXCAVATION WILL BE ALLOWED WITHOUT A VALID DIG–SAFE NUMBER.
5. THE PROPERTY LINE AND TOPOGRAPHIC INFORMATION SHOWN ON THE PLANS WERE DEVELOPED FROM A FIELD SURVEY BY NORTHEAST SURVEY CONSULTANTS, MAY, 2013. THE CONTRACTOR SHALL PRESERVE ALL SURVEY STAKES TO THE EXTENT POSSIBLE OR REPLACE DAMAGES STATION STAKES AS DIRECTED BY THE ENGINEER IF REQUIRED.
6. LOCATIONS OF UTILITIES SHOWN HEREIN ARE THE RESULT OF SURFACE EVIDENCE AS LOCATED BY FIELD SURVEY, PLANS OF RECORD AND OTHER AVAILABLE SOURCES. THIS PLAN DOES NOT NECESSARILY DEPICT THE EXACT LOCATIONS OF ALL UTILITIES THAT MAY EXIST AT THIS TIME.
7. THE CONTRACTOR SHALL PRESERVE AND PROTECT ALL BOUNDS AND PROPERTY MARKS SHOWN ON THE PLANS, LOCATED BY THE ENGINEER IN THE FIELD, OR LOCATED DURING THE COURSE OF THE CONSTRUCTION. A REGISTERED LAND SURVEYOR AT THE CONTRACTOR'S EXPENSE SHALL RESTORE ANY PROPERTY MARKS DISTURBED OR DESTROYED FOR ANY REASON.
8. THE CONTRACTOR SHALL BE SOLELY RESPONSIBLE FOR LAYING OUT ALL ITEMS OF THE WORK BASED ON CERTAIN HORIZONTAL CONTROL AND BENCHMARK SUPPLIED BY THE SURVEYOR OF RECORD. ANY DISCREPANCIES SHALL BE IMMEDIATELY REPORTED TO THE ENGINEER.
9. THE SURVEYOR WILL LAYOUT PROPOSED CENTERLINE AND PROVIDE ON–SITE BENCHMARKS FOR THE CONTRACTORS USE. IT IS THE RESPONSIBILITY OF THE CONTRACTOR TO PROTECT THE LAYOUT AND CREATE OFFSETS.
10. IT SHALL BE THE CONTRACTOR'S RESPONSIBILITY TO MAINTAIN ALL UTILITIES FUNCTIONING PROPERLY IN THE AREAS OF CONSTRUCTION. ALL PIPES AND STRUCTURES WITHIN THE LIMITS OF THIS CONTRACT SHALL BE LEFT IN A CLEAN AND OPERABLE CONDITION AT THE COMPLETION OF THE WORK. THE CONTRACTOR SHALL TAKE ALL NECESSARY PRECAUTIONS TO PREVENT SAND AND SILT FROM DISTURBED AREAS FROM ENTERING THE SYSTEM. CONTRACTOR IS RESPONSIBLE FOR DAMAGE SUSTAINED TO ANY EXISTING UTILITIES AND IT IS HIS RESPONSIBILITY TO MAKE REPAIRS TO THE REQUIREMENTS OF THE TOWN OR RESPECTIVE UTILITY COMPANY.
11. THE CONTRACTOR SHALL PROVIDE ALL MATERIALS, LABOR, EQUIPMENT, PERMITS AND APPURTENANCES NECESSARY TO PROVIDE A COMPLETE PROJECT AS INDICATED ON THE PLANS AND IN THESE SPECIFICATIONS.
12. ANY AND ALL DEMOLISHED TREES, STRUCTURES AND OTHER RUBBLE MATERIAL PERTAINING TO THIS PROJECT SHALL BE DISPOSED OF BY THE CONTRACTOR OFF–SITE AT THEIR EXPENSE IN ACCORDANCE WITH TOWN OF SOUTH HADLEY ORDINANCES, THE MASSACHUSETTS WETLAND PROTECTION ACT, CHAPTER 131, SECTION 40, G.L., AND ALL APPLICABLE STATE AND FEDERAL ENVIRONMENTAL REGULATIONS.
13. ALL PAVEMENT DISTURBED BY THE CONTRACTOR'S OPERATIONS SHALL BE REPLACED IN ACCORDANCE WITH THE SPECIFICATIONS AND AS SHOWN ON THE DRAWINGS.
14. THE CONTRACTOR WILL PROTECT ALL TRENCHES AND EXCAVATION AREAS WITH BARRICADES AND LIGHTS, PROVIDE POLICE PROTECTION, AND AGREE TO HOLD THE TOWN OF SOUTH HADLEY HARMLESS FROM ALL CLAIMS FOR DAMAGES WHATSOEVER.
15. TRAFFIC SHALL BE MAINTAINED AT ALL TIMES.
16. IN PAVED AREAS THE TOP OF THE MANHOLE COVER SHALL BE SET FLUSH WITH THE PAVED SURFACE. IN OTHER AREAS, THE TOP OF THE COVER SHALL EXTEND 6 INCHES ABOVE FINISHED GRADE, OR AS SHOWN ON THE DRAWINGS, OR AS DIRECTED BY THE ENGINEER.
17. ALL MATERIALS AND METHODS ARE TO COMPLY WITH THE TOWN OF SOUTH HADLEY DPW STANDARDS OR MASSACHUSETTS HIGHWAY (WHERE APPLICABLE), UNLESS OTHERWISE DIRECTED BY THE ENGINEER.
18. PERMITS WILL BE REQUIRED BY CONTRACTOR WHEN WORKING WITHIN OR OCCUPYING PUBLIC WAY. CONTRACTOR IS RESPONSIBLE FOR OBTAINING ALL REQUIRED WORK PERMITS AND MAINTAINING A COPY OF ALL PERMITS ON–SITE AT ALL TIMES.
19. THE BACKFILL WILL CONSIST OF THE EXCAVATED MATERIAL, IF IT IS DECLARED SUITABLE BY THE ENGINEER. BACKFILL WILL BE PLACED IN SUCCESSIVE LAYERS NOT MORE THAN TWELVE INCHES AND SHALL BE COMPACTED TO 95% OF MAXIMUM DRY DENSITY PER STANDARD PROCTOR TEST (PER ASTM 698) FOR ALL APPLICABLE TYPES OF BACKFILL MATERIAL. NO FROZEN SOIL SHALL BE USED AS BACKFILL. IF, IN THE OPINION OF THE ENGINEER OR THE DPW, THE EXCAVATED MATERIAL IS UNSUITABLE, THE ENTIRE MATERIAL FOR FILLING SHALL CONSIST OF APPROVED GRAVEL OR APPROVED BORROW, AS DIRECTED.

STORM SEWER NOTES

1. STORM SEWER PIPE SHALL BE SIZED AS SHOWN ON PLANS AND SHALL BE STEEL REINFORCED CONCRETE PIPE (RCP).
2. ALL DRAIN PIPE SHALL HAVE MAGNETIC UTILITY WARNING TAPE. THE TAPE SHALL BE BURIED APPROX. 2 FEET BELOW FINISH GRADE.
3. STORM SEWER MANHOLE COVER SHALL HAVE THREE (3) INCH LETTERING "STORM" FORMED INTO CAST IRON COVER AND SHALL BE 26 INCHES IN DIAMETER.
4. ALL CATCH BASIN GRATES SHALL BE SQUARE, TYPE F, AS MANUFACTURED BY LEBARON FOUNDRY COMPANY, BOX 746, BROCKTON, MA 02403, OR APPROVED EQUAL.
5. SEE GENERAL NOTES ABOVE FOR DETAILED BACKFILLING PROCEDURES.

SANITARY SEWER NOTES

1. SANITARY SEWER PIPE SHALL BE SIZED AS SHOWN ON PLANS AND SHALL BE POLY VINYL CHLORIDE (PVC), SDR 35 PIPE, AND ALL MAINS AND SERVICES LINES SHALL HAVE A MINIMUM SLOPE OF 0.02 (2%).
2. SANITARY SEWER PIPE SHALL CONFORM TO ASTM D 3034, AND MARKED WITH MANUFACTURERS NAME, DIAMETER, PVC CLASSIFICATION, SERVICE DESIGNATION, DATE OF MANUFACTURE, ETC.
3. ALL SANITARY SEWER PIPE SHALL HAVE MAGNETIC UTILITY WARNING TAPE. THE TAPE SHALL BE BURIED APPROX. 2 FEET BELOW FINISH GRADE AND AT LEAST 1–FT ABOVE PIPE.
4. SANITARY SEWER MANHOLE COVERS SHALL HAVE THREE (3) INCH LETTERING "SEWER" FORMED INTO CAST IRON COVER AND SHALL BE 26 INCHES IN DIAMETER.
5. ALL SANITARY SEWER MANHOLE COVERS AND FRAMES SHALL BE MANUFACTURED BY LEBARON FOUNDRY COMPANY, BOX 746, BROCKTON, MA 02403, OR APPROVED EQUAL.
6. SANITARY SEWER MANHOLES SHALL HAVE FORMED CHANNELS MADE OF BRICK AND MORTAR AND BE FREE OF GAPS, DISJOINTS, OR DEBRIS PRIOR TO PROJECT ACCEPTANCE, CHANNEL SLOPES SHALL BE A MINIMUM OF 0.02 (2%).
7. SANITARY SEWER MANHOLE AND PIPES SHALL BE AIR PRESSURE TESTED PRIOR TO PROJECT ACCEPTANCE.
8. SEE GENERAL NOTES FOR DETAILED BACKFILL.

STORMWATER MANAGEMENT SYSTEM MAINTENANCE:

1. OPERATION AND MAINTENANCE OF STORMWATER MANAGEMENT SYSTEM WILL BE THE RESPONSIBILITY OF THE OWNER OF THE FACILITY.
2. ANNUAL (ONCE A YEAR) PAVEMENT SWEEPING, CATCH BASIN SUMP, AND DETENTION POND CLEANING SHALL OCCUR IN THE MONTH OF MAY OF EACH CALENDAR YEAR.
3. SEDIMENTATION, FLOATING OILS, AND FLOATING DEBRIS SHALL BE REMOVED FROM CATCH BASINS, GRASS SWALES, AND DETENTION BASIN ON AS NEEDED BASIS, ONCE A YEAR OR MORE FREQUENT DEPENDING ON SILTATION AND FLOATING DEBRIS.

LAYOUT & MATERIALS NOTES

1. CONTRACTOR SHALL VERIFY ALL DIMENSIONS AND LAYOUT LOCATION OF ALL ITEMS, WITH THE APPROVAL OF LANDSCAPE ARCHITECT/ENGINEER, PRIOR TO BEGINNING WORK.
2. ALL DIMENSION LINES ARE PARALLEL OR PERPENDICULAR TO THE LINES FROM WHICH THEY ARE MEASURED, UNLESS OTHERWISE NOTED.
3. ALL TRAFFIC LINES ARE 4" WIDE, WHITE TRAFFIC PAINT, UNLESS OTHERWISE NOTED.
4. WRITTEN DIMENSIONS SHALL CONTROL OVER SCALED DIMENSIONS IN ALL INSTANCES. NOTIFY LANDSCAPE ARCHITECT/ENGINEER OF ANY DISCREPANCIES.
5. SCHEDULE ALL WORK IN CAREFUL MANNER WITH ALL NECESSARY CONSIDERATION FOR NEIGHBORS AND THE PUBLIC.
6. ALL PAVEMENT MARKINGS DESIGNATIONS REFER TO MANUAL UNIFORM TRAFFIC CONTROL DEVICES, UNLESS OTHERWISE NOTED.

GENERAL EROSION CONTROL GUIDELINES

1. ALL AREAS THAT ARE DISTURBED DURING GRADING OPERATIONS WHICH WILL NOT RECEIVE HOT MIX ASPHALT WILL BE COVERED WITH 6" OF LOAM, SEED AND BE COVERED WITH TOBACCO NETTING.
2. EROSION CONTROL MEASURES SHALL BE INCORPORATED IN THE SEQUENCE OF CONSTRUCTION TO PREVENT SEDIMENT LADEN WATER FROM LEAVING THE SITE.
3. NATURAL VEGETATION SHALL BE RETAINED WHENEVER FEASIBLE UP TO THE SCHEDULED START OF CONSTRUCTION ACTIVITY IN THE AREA. WHERE POSSIBLE, CLEARING SHALL IMMEDIATELY PRECEED CONSTRUCTION ACTIVITY.
4. AREAS SUBJECT TO EROSION SHALL BE MINIMIZED IN TERMS OF TIME AND AREA.
5. IN GENERAL, WORK REQUIRING EROSION CONTROL INCLUDES EXCAVATIONS, FILLS, DRAINAGE, SWALES, AND DITCHES, ROUGH AND FINISH GRADING, AND STOCKPILING OF EARTH.
6. EROSION CONTROL MEASURES SHALL, WHERE APPLICABLE, INCORPORATE AT LEAST THE FOLLOWING PROCEDURES DETAILED ON THIS DRAWING
   A. TEMPORARY BARRIER OF HAY BALES OR SILT SACK TO PREVENT SEDIMENT–LADEN WATER FROM ENTERING STORM DRAINAGE SYSTEMS.
   B. TEMPORARY BARRIER OF HAY BALES TO ACT AS EROSION CHECKS AT THE TOES OF EMBANKMENTS AND SLOPES.
   C. TEMPORARY EARTH BERMS TO ACT AS SEDIMENT TRAPS IN AREAS OF EXTREME RUNOFF.
   D. TEMPORARY EROSION CHECKS IN DITCHES AND SWALES TO PREVENT SEDIMENT–LADEN WATER FROM ENTERING BODIES OF SURFACE WATER.
   E. PROVIDE TEMPORARY SLOPE EROSION CONTROL WHERE REQUIRED.
   F. FILL AND GRADING SHALL BE TREATED WITH SLOPE STABILIZATION SEEDING AND HAY MULCH UPON COMPLETION.
7. ADDITIONAL EROSION CONTROL MEASURES SHALL BE INCORPORATED AS DIRECTED BY THE ENGINEER OR ENVIRONMENTAL PROFESSIONAL WHEN THE EXISTING MEASURES ARE ADEQUATE.
8. EROSION CONTROL MEASURES SHALL BE MAINTAINED UNTI FINISHED GRADE IS STABILIZED, EROSION CONTROL MEASURES SHALL THEN BE REMOVED AFTER ALL DISTURBED AREAS ARE STABILIZED WITH A THICK COVER OF GRASS OR ADEQUATE SURFACE TREATMENT AS NOTED ON THESE PLANS AND SPECIFICATIONS.

PLANTING AND SEEDING NOTES

1. ALL NURSERY STOCK SHALL BE IN CONFORMANCE WITH THE AMERICAN STANDARD FOR NURSERY STOCK, AS PUBLISHED BY THE AMERICAN ASSOCIATION OF NURSERYMEN AS TO SIZES AND FORM.
2. ALL PLANTS SHALL CONFORM TO THE MEASUREMENTS SPECIFIED IN THE PLANTING LIST, EXCEPT THAT PLANTS LARGER THAN THOSE SPECIFIED MAY BE USED IF APPROVE BY THE LANSCAPE ARCHITECT.
3. ALL PLANTS SHALL BE NURSERY–GROWN IN ACCORDANCE WITH GOOD HORTICULTURAL PRACTICES AND SHALL BE GROWN UNDER CLIMATE CONDITIONS SIMILAR TO THOSE IN THE PROJECT LOCALITY FOR AT LEAST TWO YEARS.
4. BALLED AND BURLAPPED PLANTS (B&B) SHALL BE MOVED WITH THE ROOT SYSTEMS AS SOLID UNITS. THE BALLS SHALL BE FIRMLY WRAPPED WITH BURLAP.
5. PLANTING SOIL
   A. PLANTING SOIL SHALL BE MIXTURE OF 2/3 TOPSOIL AND 1/3 PEAT MOSS BY VOLUME.
   B. PLANTING SOIL SHALL HAVE A PH VALUE RANGE OF 5.5 TO 7.0. IF PLANTING SOIL DOES NOT FALL WITHIN REQUIRED PH RANGE, LIMESTONE OR ALUMINUM SULFATE SHALL BE ADDED TO BRING THE PH WITHIN THE SPECIFIED LIMITS.
6. PLANTING BEDS TO RECEIVE 3–INCH DEPTH OF SHREDDED BARK MULCH OVER WEED CHECK FABRIC UNLESS OTHERWISE NOTED ON PLAN.
7. ALL PLANT MATERIAL SHALL BE GUARANTEED FOR ONE FULL GROWING SEASON (ONE YEAR) AFTER INSTALLATION.
8. ALL AREAS DISTURBED DURING CONSTRUCTION NOT DESIGNATED TO RECEIVE OTHER TREATMENT SHALL BE LOAMED TO A MINIMUM DEPTH OF 4" AND SEEDED IN ACCORDANCE WITH THE FOLLOWING.
   A. INCORPORATE GROUND LIMESTONE INTO ALL AREAS TO BE SEEDED AT A RATE OF 50 LBS/1,000 S.F.
   B. APPLY 10–6–4 FERTILIZER TO ALL AREAS TO BE SEEDED AT A RATE OF 20 LBS/1,000 S.F.
   C. THOROUGHLY INCORPORATE LIME AND FERTILIZER INTO SEED BED TO DEPTH OF 3" BY DISCING OR OTHER APPROVED METHOD.
   D. SEED WITH THE FOLLOWING MIXTURE, APPLIED AT A RATE OF 10 LBS/1,000 S.F.

SEED MIX

NAME OF SEED	% BY WEIGHT IN MIXTURE	MINIMUM % PURITY	MINIMUM % GERMINATION
POS PRATENSIS "BARON" BARON BLUEGRASS	50	90	75
FESTUCA RUBRA "PENNLAWN" PENNLAWN FESCUE	25	95	85
LOLIUM PERENNE "PENNFINE" PENNFINE	25	98	95

   E. MULCH ALL SEEDED AREAS WITH STRAW OR SALT HAY AT A RATE OF 50 LBS/1,000 S.F.
   F. ALL SLOPES OF 3:1 OR GREATER AFTER BEING LOAMED, SEEDED AND MULCHED IN ACCORDANCE WITH THE ABOVE SHALL BE SECURED WITH JUTE OR DEGRADABLE TOBACCO NETTING. OVERLAP ALL NETTING JOINTS A MINIMUM OF 4" AND SECURE WITH A DOUBLE ROW OF STAPLES.
9. SOD MAY BE USED AS AN ALTERNATE ON ALL AREAS SHOWN TO BE LOAMED AND SEEDED, IF REQUESTED BY OWNER.

WATER CONSTRUCTION NOTES:

1. ALL WATER MAIN SHALL BE DUCTILE IRON (DI) CLASS 52, AWWA C–151 (ANSI A21.50).
2. DI PIPE SHALL BE DOUBLE CEMENT LINED WITH A SEAL COAT CONFORMING TO AWWA C–104 (ANSI A–21.4) AND COATED ON THE OUTSIDE BY A MINIMUM 1/32" COAL TAR ENAMEL.
3. JOINTS FOR DI PIPE MAY BE PUSH–ON OR MECHANICAL WITH RUBBER GASKETS CONFORMING TO AWWA C–111 (ANSI A–21.11).
4. ALL FITTINGS SHALL BE DUCTILE IRON WITH MECHANICAL JOINTS CONFORMING TO AWWA C–153 (ANSI A21.53).
5. ALL WATER MAINS, UNLESS OTHERWISE NOTED, SHALL BE INSTALLED WITH A MINIMUM FIVE FEET OF COVER. WHEN CROSSING ABOVE OR BELOW WATER PIPELINES, A MINIMUM VERTICAL SEPARATION OF SIX INCHES SHALL BE PROVIDED. WHEN CROSSING SANITARY SEWERS, A MINIMUM OF 18" SHALL BE PROVIDED. WHEN CROSSING STORM SEWERS, A MINIMUM OF 12" SHALL BE PROVIDED.
6. THE INSTALLED WATER MAIN SHALL BE PRESSURE TESTED, FLUSHED AND DISINFECTED IN ACCORDANCE WITH AWWA C–600 AND AWWA C–651.
7. DUCTILE IRON PIPES SHALL BE INSTALLED IN ACCORDANCE WITH AWWA C–600.
8. ALL FITTINGS SHALL BE RESTRAINED EITHER BY A CONCRETE THRUST BLOCK OR BY MECHANICAL JOINT RESTRAINTS. IF MECHANICAL JOINT RESTRAINTS ARE SELECTED, THE PIPE CONNECTED TO THE FITTING SHALL BE RESTRAINED PER THE RESTRAINT SCHEDULE. FOR THRUST BLOCK DETAILS AND MINIMUM BLOCK BEARING AREAS, SEE DETAILS.
9. CONTRACTOR SHALL NOTIFY DIG SAFE 3 BUSINESS DAYS PRIOR TO START OF CONSTRUCTION.
10. ALL WATER MAINS AND SERVICES SHALL HAVE MAGNETIC UTILITY WARNING TAPE. THE TAPE SHALL BE BURIED APPROXIMATELY 2 FEET BELOW FINISHED GRADE.
11. SEE GENERAL NOTES FOR DETAILED BACKFILL.
12. ALL WATER SERVICES CONNECTION SHALL BE 1–INCH DIAMETER COPPER TUBING.
13. CONTRACTOR TO OBTAIN PERMITS FROM TOWN & COORDINATE CONNECTION AND ACTIVATION WITH TOWN WATER DEPARTMENT.

GRADING NOTES

1. ALL ELEVATIONS AND GRADES SHALL BE VERIFIED IN THE FIELD PRIOR TO CONSTRUCTION. NOTIFY LANDSCAPE ARCHITECT/ENGINEER OF ANY DISCREPANCIES.
2. THE GRADING MAY BE ADJUSTED DURING CONSTRUCTION ONLY AFTER APPROVAL BY THE LANDSCAPE ARCHITECT/ENGINEER.
3. PRIOR TO ANY GRADING AND EXCAVATION, STRIP AND STOCKPILE TOPSOIL FROM ALL EXISTING LOAMED AREAS TO BE DISTURBED.
4. MINIMUM PAVEMENT SLOPE IS 0.5%. MAXIMUM PAVEMENT SLOPE IS 6.7%. ALL NEW PAVING SHALL TIE INTO EXISTING SURFACES WITH SMOOTH, EVEN, CONTINUOUS GRADE AND SURFACE.

ADA NOTES (GENERAL)

1. ALL SIDEWALKS, RAMPS, CURB RAMPS, ENTRY'S AND ACCESSIBLE ROUTES SHALL COMPLY WITH 2010 ADA STANDARDS FOR ACCESSIBLE DESIGN, 28 CFR PART 35.151, 28 CFR PART 36, AND 2004 ADAAG.
2. SIDEWALKS SHALL BE A MINIMUM OF 3–FT WIDE. LANDINGS SHALL HAVE MINIMUM WIDTH EQUAL TO SIDEWALK WIDTH, AND LENGTH OF 5–FT. LANDINGS WITH CHANGE IN DIRECTION SHALL BE 5–FT BY 5–FT IN PLANAR DIMENSIONS.
3. RAMPS SHALL NOT EXCEED A SLOPE OF 1V;12H.
4. NO RAMP RUN RISE SHALL BE GREATER THAN 6–INCHES. IF A RAMP RUN RISE IS GREATER THAN 6–INCHES THE RAMP SHALL HAVE RAILING UNLESS THE SLOPE IS LESS THAN 1V:20H (5%).
5. ADA PARKING STALLS SHALL BE A MINIMUM OF 10–FT WIDE.
6. VAN DESIGNATED PARKING STALL SHALL HAVE 8–FT WIDE ACCESS AISLE WITH SPECIAL ANGLED PAVEMENT MARKINGS.
7. ADA PARKING STALLS SHALL BE DEMARCATED WITH ADA SIGN (12'X18") ON 6–FT HIGH SUPPORT POST.

Hudson Design Group LLC
116 PLEASANT STREET
SUITE 302-A
P.O. BOX 692
EASTHAMPTON, MA 01027
TEL: (413) 588-8139
FAX: (413) 517-0590

PROJECT NO: CVL–12–024

DRAWN BY: SB

CHECKED BY: MM

SUBMITTALS

1	09–12–13	FINAL CONCEPT
0	05–30–13	ORIGINAL CONCEPT

CVL–12–024
SOUTH HADLEY SQUARE RETAIL DEVELOPMENT

SHEET TITLE

CONSTRUCTION NOTES

SHEET NUMBER

A–1

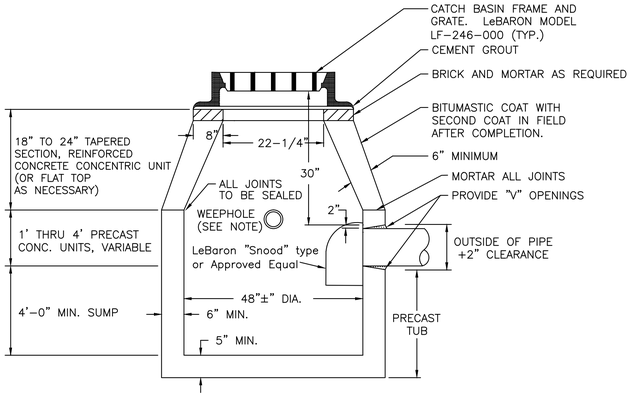

NOTE: WEEPHOLES TO BE 4" V.C. PIPE 12" LONG PLACED THROUGH EACH WALL OF CATCH BASIN. OUSIDE END TO BE COVERED WITH 1/4" MESH GALVANIZED WIRE SCREEN. PLACE 1/4" C.Y. SCREENED GRAVEL (1" TO 1 1/2") AROUND OUTSIDE END OF PIPE. USE A MINIMUM OF 3 WEEPHOLES PER BASIN.

PRECAST REINFORCED CONCRETE CATCH BASIN

N.T.S.

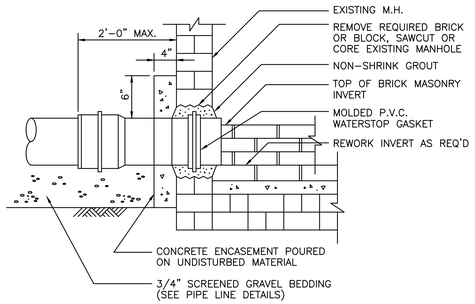

BRICK OR BLOCK MANHOLE PIPE CONNECTION

N.T.S.

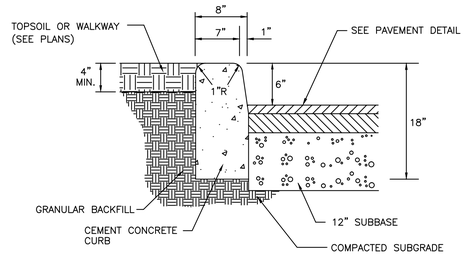

PRECAST CEMENT CONCRETE CURB

N.T.S.

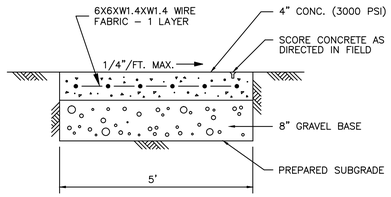

CEMENT CONCRETE WALK

N.T.S.

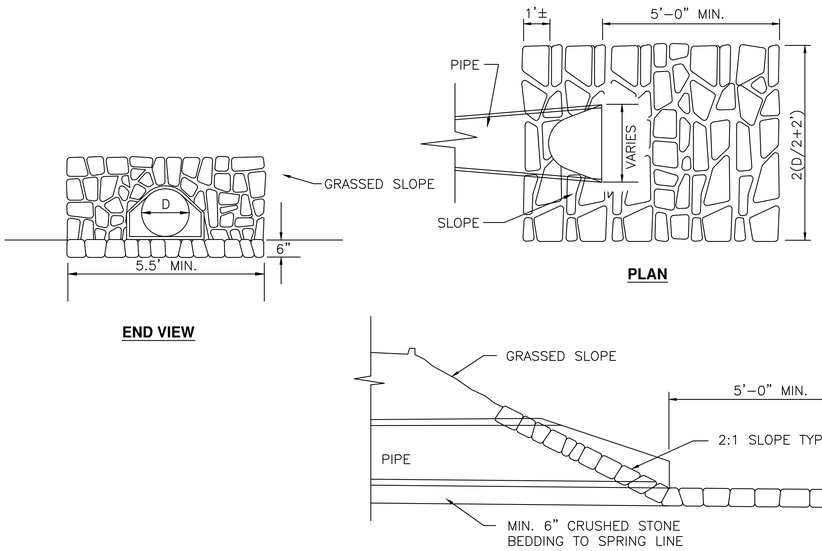

STONE PIPE ENDS (WITH FLARED END SECTION)

N.T.S.

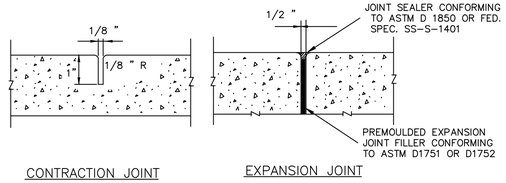

CEMENT CONCRETE WALK JOINT

N.T.S.

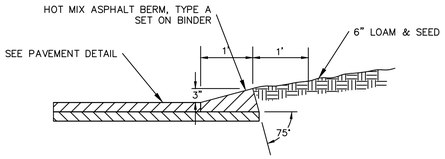

HOT MIX ASPHALT BERM TYPE A

N.T.S.

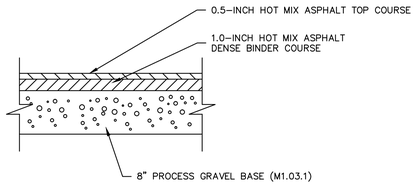

HOT-MIX ASPHALT PAVEMENT

N.T.S.

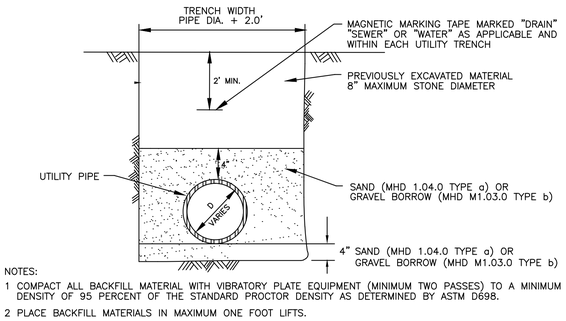

NOTES:

1 COMPACT ALL BACKFILL MATERIAL WITH VIBRATORY PLATE EQUIPMENT (MINIMUM TWO PASSES) TO A MINIMUM DENSITY OF 95 PERCENT OF THE STANDARD PROCTOR DENSITY AS DETERMINED BY ASTM D698.

2 PLACE BACKFILL MATERIALS IN MAXIMUM ONE FOOT LIFTS.

TYPICAL UTILITY LINE TRENCH SECTION

N.T.S.

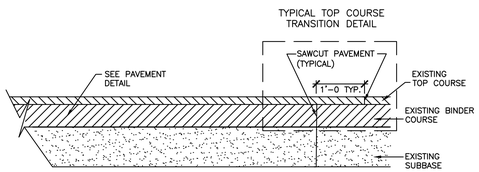

TRANSITION PAVEMENT DETAIL

N.T.S.

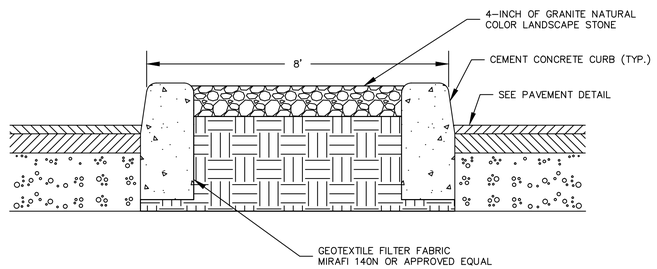

LANDSCAPE ISLAND DETAIL

N.T.S.

Hudson Design Group LLC
116 PLEASANT STREET
SUITE 302-A
P.O. BOX 692
EASTHAMPTON, MA 01027
TEL: (413) 588-8139
FAX: (413) 517-0590

PROJECT NO: CVL-12-024

DRAWN BY: SB

CHECKED BY: MM

SUBMITTALS

1	09-12-13	FINAL CONCEPT
0	05-30-13	ORIGINAL CONCEPT

CVL-12-024
SOUTH HADLEY SQUARE RETAIL DEVELOPMENT

SHEET TITLE

DETAILS

SHEET NUMBER

A-2

SITE PLAN APPROVED

PLANNING BOARD CHAIRMAN

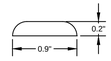

TRUNCATED DOMES
SECTION VIEW

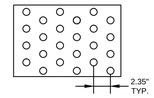

TRUNCATED DOMES
PLAN VIEW

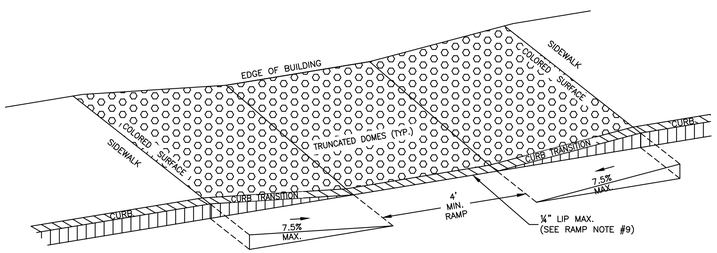

ACCESSIBLE CURB RAMP (ACR) TYPE 'D'

NOT TO SCALE

RAMP (TYPE D) NOTES:

1. THE MAXIMUM ALLOWABLE SIDEWALK AND CURB RAMP CROSS SLOPES SHALL BE 1.5 (1% MIN.).
2. THE MAXIMUM ALLOWABLE SLOPE OF ACCESSIBLE ROUTE EXCLUDING CURB RAMPS SHALL BE 5%.
3. THE MAXIMUM ALLOWABLE SLOPE OF ACCESSIBLE ROUTE CURB RAMPS SHALL BE 7.5%.
4. A MINIMUM OF 3 FEET CLEAR SHALL BE MAINTAINED AT ANY PERMANENT OBSTACLE IN ACCESSIBLE ROUTE (IE. HYDRANTS, UTILITY POLES, TREE WELLS, SIGNS, ETC.).
5. CURB TREATMENT VARIES; SEE PLANS FOR CURB TYPE.
6. RAMP, CURB, AND ADJACENT PAVEMENTS SHALL BE GRADED TO PREVENT PONDING.
7. SEE TYPICAL SIDEWALK SECTION FOR RAMP SECTION CONSTRUCTION.
8. WHERE ACCESSIBLE ROUTES ARE LESS THAN 5' IN WIDTH (EXCLUDING CURBING) A 5' x 5' PASSING AREA SHALL BE PROVIDED AT INTERVALS NOT TO EXCEED 200 FEET.
9. ELIMINATE CURBING AT RAMP WHERE IT ABUTS ROADWAY, EXCEED WHERE VERTICAL CURBING IS INDICATED ON THE DRAWINGS TO BE SET FLUSH.
10. DETECTABLE WARNINGS SHALL CONTRAST VISUALLY WITH ADJOINING SURFACES.

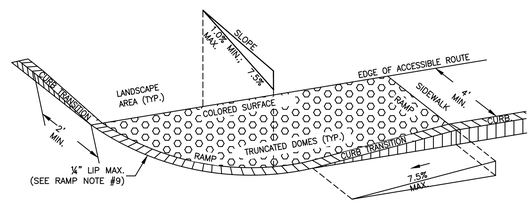

ACCESSIBLE CURB RAMP (ACR) TYPE 'B'

NOT TO SCALE

RAMP (TYPE B) NOTES:

1. THE MAXIMUM ALLOWABLE SIDEWALK AND CURB RAMP CROSS SLOPES SHALL BE 1.5 (1% MIN.).
2. THE MAXIMUM ALLOWABLE SLOPE OF ACCESSIBLE ROUTE EXCLUDING CURB RAMPS SHALL BE 5%.
3. THE MAXIMUM ALLOWABLE SLOPE OF ACCESSIBLE ROUTE CURB RAMPS SHALL BE 7.5%.
4. A MINIMUM OF 3 FEET CLEAR SHALL BE MAINTAINED AT ANY PERMANENT OBSTACLE IN ACCESSIBLE ROUTE (IE. HYDRANTS, UTILITY POLES, TREE WELLS, SIGNS, ETC.).
5. CURB TREATMENT VARIES; SEE PLANS FOR CURB TYPE.
6. RAMP, CURB, AND ADJACENT PAVEMENTS SHALL BE GRADED TO PREVENT PONDING.
7. SEE TYPICAL SIDEWALK SECTION FOR RAMP SECTION CONSTRUCTION.
8. WHERE ACCESSIBLE ROUTES ARE LESS THAN 5' IN WIDTH (EXCLUDING CURBING) A 5' x 5' PASSING AREA SHALL BE PROVIDED AT INTERVALS NOT TO EXCEED 200 FEET.
9. ELIMINATE CURBING AT RAMP WHERE IT ABUTS ROADWAY, EXCEED WHERE VERTICAL CURBING IS INDICATED ON THE DRAWINGS TO BE SET FLUSH.
10. DETECTABLE WARNINGS SHALL CONTRAST VISUALLY WITH ADJOINING SURFACES.

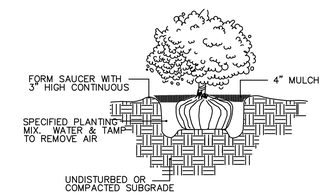

SHRUB PLANTING

N.T.S.

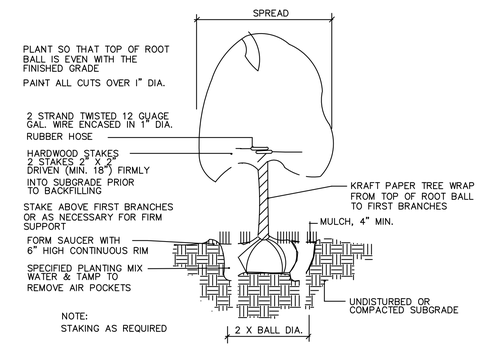

TREE PLANTING - VERTICAL STAKES

N.T.S.

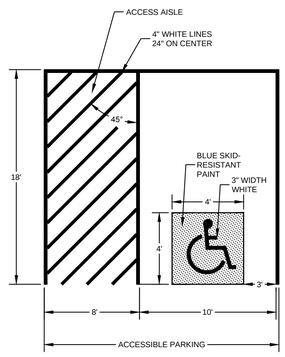

ACCESSIBLE PARKING SPACE

NOT TO SCALE

PARKING SPACE NOTES:

1. ALL DIMENSIONS TO EDGES OF 4" PAVEMENT STRIPING.
2. ALL STRIPING SHALL BE 4" WIDE SOLID WHITE PAVEMENT MARKINGS UNLESS OTHERWISE NOTED.
3. 8' STALL WIDTH REFERS TO 8' CLEAR BETWEEN INSIDE EDGES OF PAVEMENT MARKINGS.

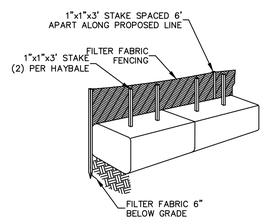

EROSION CONTROL DETAIL

NOT TO SCALE

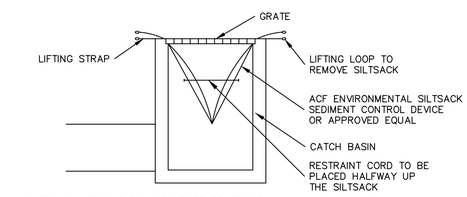

NOTE:
1. REPLACE SILTSACK ONCE RESTRAINT CORD IS NO LONGER VISIBLE
2. TWO LIFTING STRAP TO BE ATTACHED AT THE BOTTOM TO FACILITATE EMPTYING OF THE SILTSACK
3. SILTSACK TO BE 2'x2' OR 2'x4'

INLET SEDIMENT CONTROL DEVICE

N.T.S.

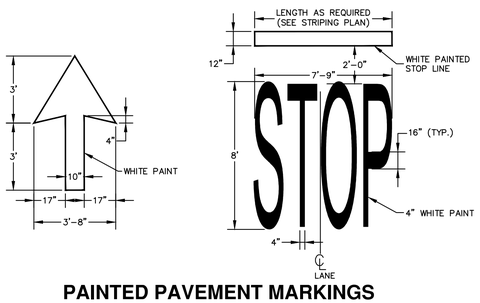

PAINTED PAVEMENT MARKINGS

NOT TO SCALE

PAVEMENT MARKING NOTES:

1. PAVEMENT MARKINGS TO BE INSTALLED UPON COMPLETION OF SITE WORK & AT LOCATIONS SHOWN ON PLAN.

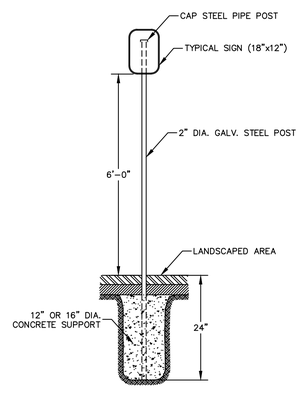

SIGN POST DETAIL

NOT TO SCALE

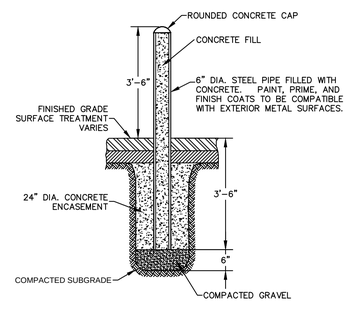

BOLLARD DETAIL

NOT TO SCALE

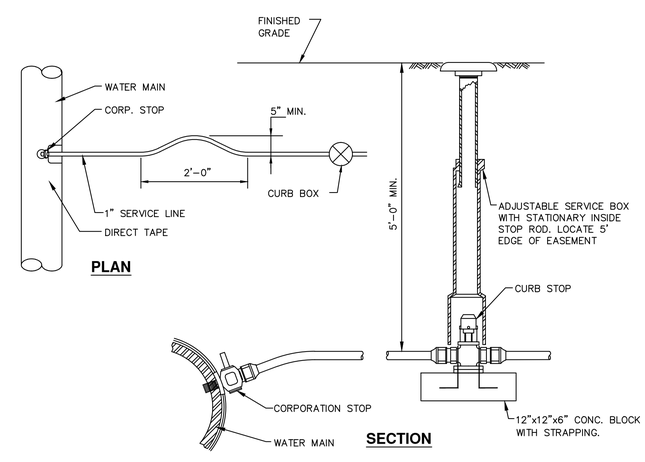

TYPICAL SERVICE CONNECTION

N.T.S.

Hudson Design Group LLC
116 PLEASANT STREET
SUITE 302-A
P.O. BOX 692
EASTHAMPTON, MA 01027
TEL: (413) 588-8139
FAX: (413) 517-0590

PROJECT NO:	CVL-12-024
DRAWN BY:	SB
CHECKED BY:	MM

SUBMITTALS

1	09-12-13	FINAL CONCEPT
0	05-30-13	ORIGINAL CONCEPT

CVL-12-024
SOUTH HADLEY SQUARE RETAIL DEVELOPMENT

SHEET TITLE

DETAILS

SHEET NUMBER

A-3

SITE PLAN APPROVED

PLANNING BOARD CHAIRMAN

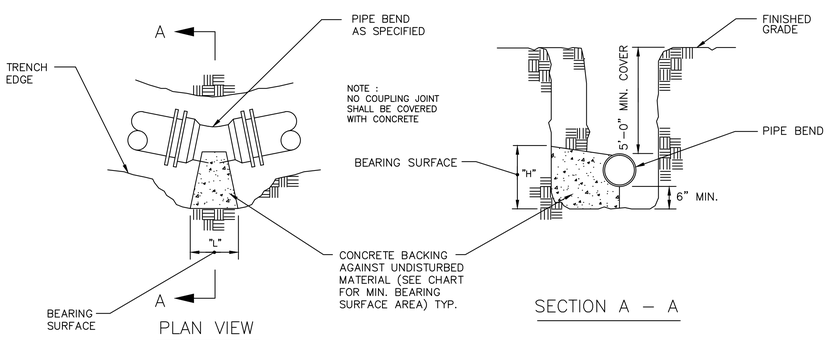

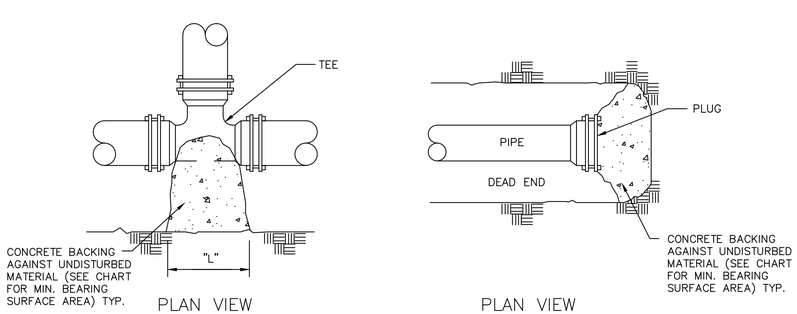

2 / A–3 **THRUST BLOK DETAILS**
SCALE: N.T.S.

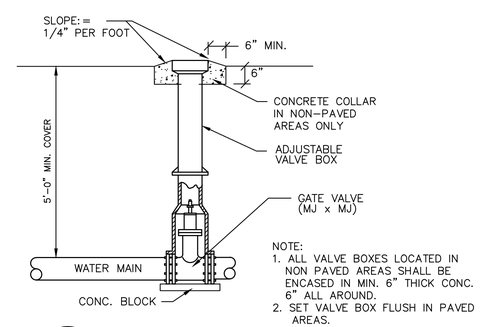

3 / A–3 **TYPICAL BURIED VALVE**
SCALE: N.T.S.

PIPE RESTRAINT SCHEDULE FOR GROUND BURIED PRESSURE PIPES①

PIPE \ DEFLECTION ANGLE	LENGTH OF RESTRAINT REQD② (FEET) 22½°	33¾°	45°	56¼°	67½°	78¾°	90° OR TEE	DESIGN FORCE ON RESTRAINT REQD (KIPS)③ 45°	90° OR TEE
6"	3	6	11	16	23	29	37	2.0	5.0
8"	4	8	15	22	31	41	50	3	9.0
10"	5	11	18	28	38	49	61	4.0	14.0
12"	6	13	22	33	45	59	73	6.0	20.0
14"	7	14	25	37	52	68	84	8.0	28.0
16"	8	16	28	42	59	77	95	11.0	36.0
18"	8	18	31	47	66	86	107	14.0	46.0
20"	9	20	35	53	73	95	118	17.0	57.0
24"	11	23	40	61	85	111	138	24.0	81.0
30"	13	29	50	75	105	136	170	37.0	127.0
36"	15	34	59	88	123	160	199	54.0	183.0
42"	17	39	67	101	141	184	223	73.0	250.0
48"	19	43	75	113	157	206	255	96.0	326.0

① THIS TABLE IS BASED ON A TEST PRESSURE OF 180 PSI (OPERATING PRESSURE + WATER HAMMER). FOR OTHER TEST PRESSURES, ALL VALUES TO BE INCREASED OR DECREASED PROPORTIONALLY

② IN EACH DIRECTION FROM POINT OF DEFLECTION EXCEPT FOR TEE AT WHICH ONLY THE BRANCH IN THE DIRECTION OF THE TEE STEM.

③ IF TIE RODS ARE USED, USE 4 RODS MINIMUM AND ADD ⅛" TO BAR DIA AS CORROSION ALLOWANCE.

MINIMUM AREA OF BEARING FACE OF CONCRETE THRUST BLOCKS IN SQUARE FEET

PIPE SIZE (INCHES)	SOIL BEARING 1,000 LBS./ SQ. FT.	2,000 LBS./ SQ. FT.	4,000 LBS./ SQ. FT.
DEAD END, TEE OR HYDRANT			
4 OR LESS	6	3	2
6	11	6	3
8	20	10	5
12	34	17	9
16	60	30	15
1/4 BEND – 90°			
4	8	4	2
6	16	8	4
8	28	14	7
12	56	28	14
16	100	50	25
1/8 BEND – 45°			
4	4	2	1
6	9	4	2
8	14	7	4
12	32	16	8
16	60	30	15
1/16 BEND – 22 1/2° OR LESS			
4	2	1	1
6	4	2	1
8	8	4	2
12	15	8	4
16	30	15	8

NOTES : THRUST BLOCKS

1. FIGURES BASED ON 300 PSI OPERATING PLUS SURGE PRESSURE.
2. CONCRETE SHALL NOT BE DUMPED OVER THE FITTING. THE BLOCK MUST BE FORMED.
3. RETAINING RODS OR RESTRAINED JOINT PIPE AS APPROVED BY THE ENGINEER MAY BE USED IN PLACE OF THRUST BLOCKS.
4. PLACE 15 LB. ROOF FELT BETWEEN PIPE AND CONCRETE.
5. CONCRETE SHALL NOT COVER PIPE JOINTS.
6. ALL BENDS, TEES, HYDRANTS AND DEAD ENDS SHALL BE BRACED WITH CONCRETE THRUST BLOCKS OR SUITABLE RESTRAINING DEVICES.
7. BEARING AREA IS AREA OF CONCRETE IN CONTACT WITH WALL OF TRENCH = H x L.
8. HEIGHT (H) AND LENGTH (L) AS REQUIRED TO OBTAIN AREA IN TABLE. L TO BE APPROXIMATELY 2 TIMES HEIGHT
9. ESTIMATED SOIL BEARING LOAD IS 2000 LBS.

Hudson Design Group LLC
116 PLEASANT STREET
SUITE 302-A
P.O. BOX 692
EASTHAMPTON, MA 01027
TEL: (413) 588-8139
FAX: (413) 517-0590

PROJECT NO: CVL–12–024

DRAWN BY: SB

CHECKED BY: MM

SUBMITTALS

1	09–12–13	FINAL CONCEPT
0	05–30–13	ORIGINAL CONCEPT

CVL–12–024
SOUTH HADLEY SQUARE RETAIL DEVELOPMENT

SHEET TITLE

DETAILS

SHEET NUMBER

A–4

SITE PLAN APPROVED

PLANNING BOARD CHAIRMAN

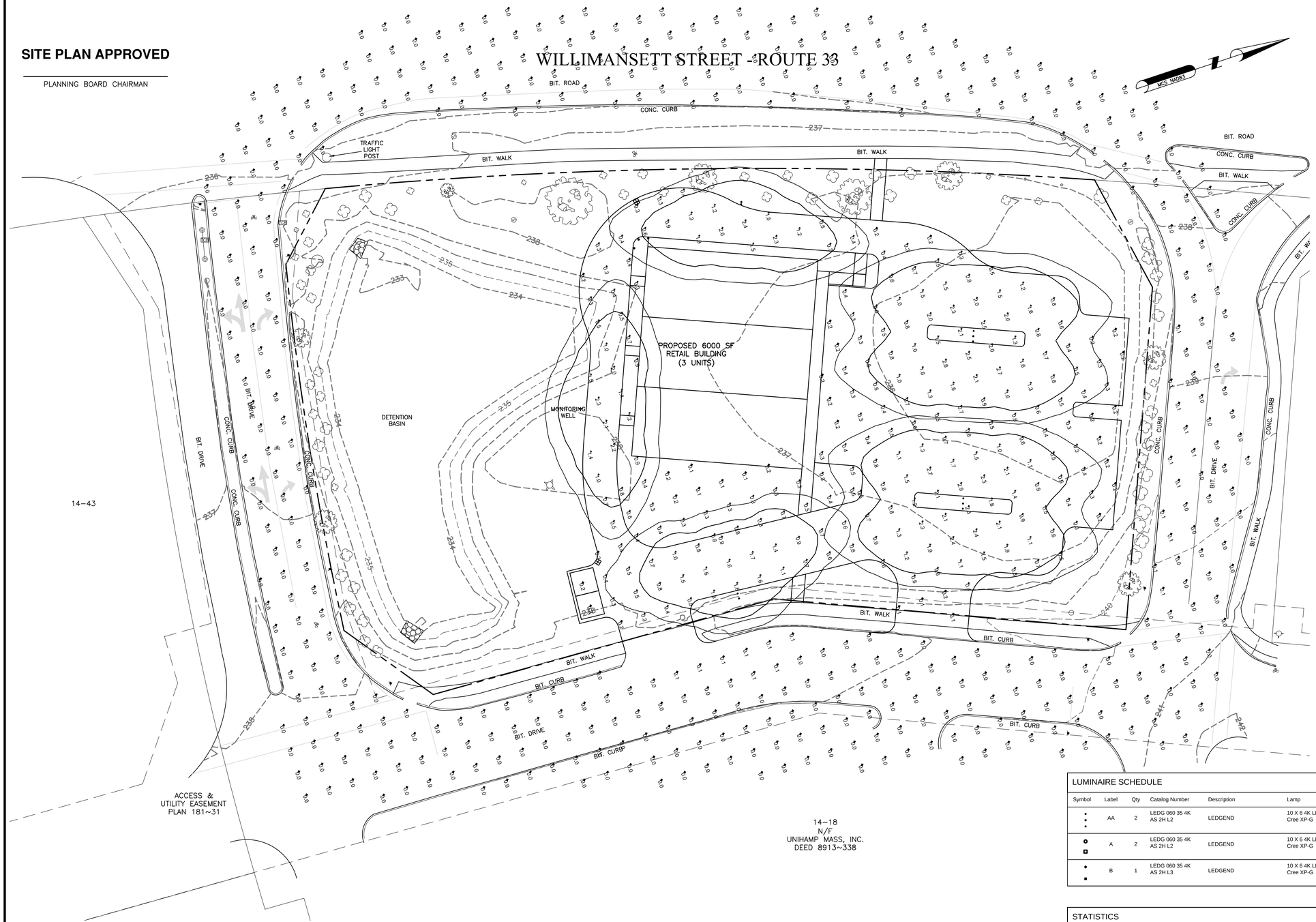

LUMINAIRE SCHEDULE

Symbol	Label	Qty	Catalog Number	Description	Lamp	File	Lumens	LLF	Watts
	AA	2	LEDG 060 35 4K AS 2H L2	LEDGEND	10 X 6 4K LED ARRAY Cree XP-G	LEDG_060_35_4K_AS_2H_L2.ies	Absolute	0.80	136.8
	A	2	LEDG 060 35 4K AS 2H L2	LEDGEND	10 X 6 4K LED ARRAY Cree XP-G	LEDG_060_35_4K_AS_2H_L2.ies	Absolute	0.80	68.4
	B	1	LEDG 060 35 4K AS 2H L3	LEDGEND	10 X 6 4K LED ARRAY Cree XP-G	LEDG_060_35_4K_AS_2H_L3.ies	Absolute	0.80	68.4

STATISTICS

Description	Symbol	Avg	Max	Min	Max/Min	Avg/Min
Parking & Drive	+	0.9 fc	2.9 fc	0.1 fc	29.0:1	9.0:1
Patio Area	+	0.4 fc	0.9 fc	0.1 fc	9.0:1	4.0:1
Property Line / Spill	+	0.0 fc	0.1 fc	0.0 fc	N / A	N / A

NOTES

1. Fixture effective mouting height 20'
2. Results caluculated are expected levels at 88,000 hours operation (20 years)

LUMINARY PLAN

SCALE: 1" = 20'

0 10 20 40 60 80 FEET

Hudson Design Group LLC

116 PLEASANT STREET
SUITE 302-A
P.O. BOX 692
EASTHAMPTON, MA 01027

TEL: (413) 588-8139
FAX: (413) 517-0590

PROJECT NO: CVL-12-024

DRAWN BY: SB

CHECKED BY: MM

SUBMITTALS

1	09-12-13	FINAL CONCEPT
0	05-30-13	ORIGINAL CONCEPT

CVL-12-024
SOUTH HADLEY SQUARE RETAIL DEVELOPMENT

SHEET TITLE

LUMINARY PLAN

SHEET NUMBER

L-1