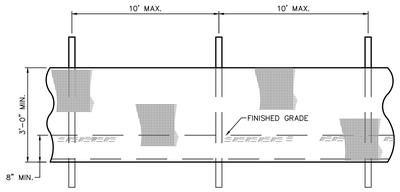

ELEVATION

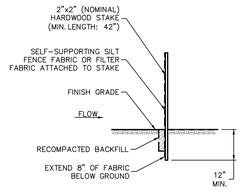

SECTION

SILT FENCE NOTES:

1.) INSTALL SILT FENCE & WOOD STAKES AS RECOMMENDED BY MANUFACTURER.

2.) SYNTHETIC FILTER FABRIC SHALL BE A PERVIOUS SHEET OF PROPYLENE, NYLON, POLYESTER OR ETHYLENE FILAMENTS AND SHALL BE CERTIFIED BY THE MANUFACTURER OR SUPPLIER AS CONFORMING TO THE SPECIFICATIONS.

1 SILT FENCE

SCALE: N.T.S.

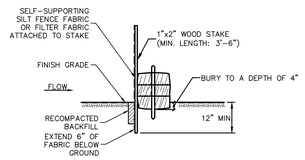

2 SILT FENCE BACKED W/ STRAW BALES

SCALE: N.T.S.

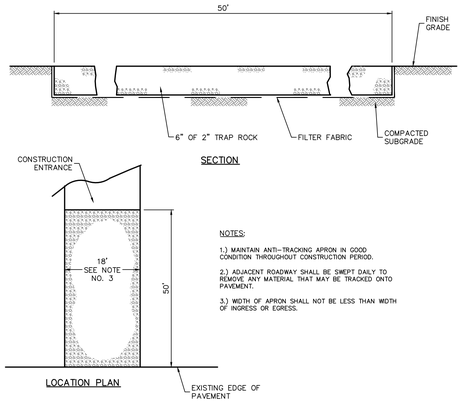

NOTES:

1.) MAINTAIN ANTI-TRACKING APRON IN GOOD CONDITION THROUGHOUT CONSTRUCTION PERIOD.

2.) ADJACENT ROADWAY SHALL BE SWEPT DAILY TO REMOVE ANY MATERIAL THAT MAY BE TRACKED ONTO PAVEMENT.

3.) WIDTH OF APRON SHALL NOT BE LESS THAN WIDTH OF INGRESS OR EGRESS.

3 CONSTRUCTION ENTRANCE

SCALE: N.T.S.

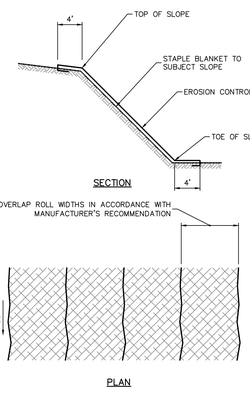

NOTE:

REFER TO MANUFACTURERS INSTALLATION INSTRUCTIONS FOR DETAILS ON INSTALLATION INCLUDING STAPLING PATTERN, OVERLAPPING DETAILS, EDGE EMBEDMENT, AND ANCHOR DETAILS. TO BE INSTALLED ON SLOPES 3:1 OR GREATER.

4 EROSION CONTROL BLANKET

SCALE: N.T.S.

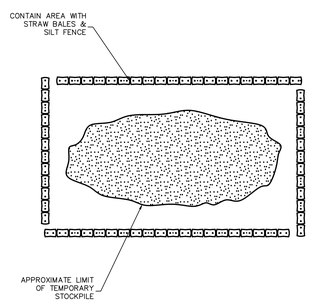

5 TEMPORARY SOIL STOCKPILE

SCALE: N.T.S.

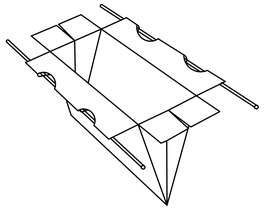

NOTES:

1. SIZED TO FIT ANY SIZE OR SHAPE CATCH BASIN.
2. ALL SEAMS DOUBLE STITCHED.
3. PERMEABILITY – REGULAR FLOW SILTSACK – 40 gal./min./sq. ft.
   HI – FLOW SILTSACK – 200 gal./min./sq. ft.

6 CATCH BASIN SILT SACK

SCALE: N.T.S.

EROSION & SEDIMENT CONTROL NOTES

1. EROSION AND SEDIMENT CONTROL MEASURES WILL BE INSTALLED PRIOR TO STUMP REMOVAL AND CONSTRUCTION. STABILIZATION OF ALL REGRADED AND SOIL STOCKPILE AREAS WILL BE INITIATED AND MAINTAINED DURING ALL PHASES OF CONSTRUCTION.

2. SEDIMENT REMOVED FROM EROSION CONTROL STRUCTURES WILL BE DISPOSED OF IN A MANNER WHICH IS CONSISTENT WITH THE INTENT OF THIS PLAN. ALL STRAW BALES OR SILT FENCE RETAINING SEDIMENT OVER 6" HIGH SHALL HAVE THE SEDIMENT REMOVED AND ALL DAMAGED EROSION CONTROLS REMOVED AND REPLACED.

3. THE CONTRACTOR WILL BE ASSIGNED THE RESPONSIBILITY FOR IMPLEMENTING THIS EROSION AND SEDIMENT CONTROL PLAN. THIS RESPONSIBILITY INCLUDES THE INSTALLATION AND MAINTENANCE OF CONTROL MEASURES, INFORMING ALL PARTIES ENGAGED ON THE CONSTRUCTION SITE OF THE REQUIREMENTS AND OBJECTIVES OF THE PLAN, AND NOTIFYING THE PROPER TOWN AGENCY OF ANY TRANSFER OF THIS RESPONSIBILITY. THE OWNER SHALL BE RESPONSIBLE FOR CONVEYING A COPY OF THE EROSION AND SEDIMENT CONTROL PLAN IF THE TITLE TO THE LAND IS TRANSFERRED.

4. THE CONTRACTOR SHALL BE RESPONSIBLE TO CONTROL DUST AND WIND EROSION THROUGHOUT THE LIFE OF HIS CONTRACT. DUST CONTROL SHALL INCLUDE, BUT IS NOT LIMITED TO, SPRINKLING OF WATER ON EXPOSED SOILS AND HAUL ROADS. CONTRACTOR SHALL CONTROL DUST TO PREVENT A HAZARD TO TRAFFIC ON ADJACENT ROADWAYS.

5. IF FINAL GRADING IS TO BE DELAYED FOR MORE THAN THIRTY (30) DAYS AFTER LAND DISTURBANCES CEASE, TEMPORARY VEGETATION OR MULCH SHALL BE USED TO STABILIZE SOILS. OUTSIDE OF THE GROWING SEASON, ONLY WOOD MULCH SHALL BE USED.

6. STRAW BALES SHALL BE USED ONLY AS A TEMPORARY MEASURE. WHERE CONTROL MEASURES WILL BE REQUIRED FOR LONGER THAN SIXTY (60) DAYS, FILTER FABRIC SHALL BE USED.

7. WHERE DEWATERING IS NECESSARY, THERE SHALL NOT BE A DISCHARGE DIRECTLY INTO WETLANDS OR WATERCOURSES. PROPER METHODS AND DEVICES SHALL BE UTILIZED TO THE EXTENT PERMITTED BY LAW, SUCH AS PUMPING WATER INTO A TEMPORARY SEDIMENTATION BASIN, PROVIDING SURGE PROTECTION AT THE INLET AND THE OUTLET OF PUMPS, FLOATING THE INTAKE OF THE PUMP, OR OTHER METHODS TO MINIMIZE AND RETAIN THE SUSPENDED SOLIDS. IF A PUMPING OPERATION IS CAUSING TURBIDITY PROBLEMS, SAID OPERATION SHALL CEASE UNTIL SUCH TIME AS FEASIBLE MEANS OF CONTROLLING TURBIDITY ARE DETERMINED AND IMPLEMENTED. THE CONTRACTOR MUST SUBMIT HIS DESIGN ALONG WITH THE LOCATIONS OF THE BASIN TO THE TOWN PRIOR TO CONSTRUCTION.

8. INSPECTION – A CERTIFIED SOIL SCIENTIST OR ENGINEER SHALL INSPECT ALL DISTURBED AREAS OF THE CONSTRUCTION ACTIVITY THAT HAVE NOT BEEN FINALLY STABILIZED, STRUCTURAL CONTROL MEASURES, AND LOCATIONS WHERE VEHICLES ENTER OR EXIT THE SITE AT LEAST ONCE EVERY WEEK AND WITHIN 24 HOURS OF THE END OF A STORM THAT IS 1.0 INCH OR GREATER. INSPECTION REPORTS SHALL BE SUBMITTED TO THE OWNER WEEKLY, AND TO THE INLAND WETLANDS AGENT AND THE PLANNING & ZONING COMMISSION MONTHLY. WHERE SITES HAVE BEEN FINALLY STABILIZED, SUCH INSPECTION SHALL BE CONDUCTED AT LEAST ONCE EVERY MONTH FOR THREE MONTHS. CONTROLS SHALL BE CLEANED, REPAIRED, AND OR REPLACED AS REQUIRED. ANY DAMAGED CONTROLS SHALL BE REPAIRED IMMEDIATELY.

9. PERFORM CONSTRUCTION SEQUENCING IN SUCH A MANNER TO CONTROL EROSION AND TO MINIMIZE THE TIME THAT EARTH MATERIALS ARE EXPOSED BEFORE THEY ARE COVERED, SEEDED, OR OTHERWISE STABILIZED.

OPERATION & MAINTENANCE PLAN DURING CONSTRUCTION

AN OPERATION AND MAINTENANCE (O&M) PLAN DURING CONSTRUCTION FOR STORMWATER CONTROLS IS DESCRIBED AS FOLLOWS:

1. OWNER SHALL BE RESPONSIBLE FOR ALL OPERATION AND MAINTENANCE OF THE SITE.

2. NO EARTHWORK ACTIVITIES SHALL COMMENCE UNTIL SILT FENCE HAS BEEN INSTALLED. SILT FENCE SHALL BE INSTALLED AS SHOWN ON THE DRAWINGS.

3. AREAS LEFT EXPOSED TO EROSION FOR MORE THAN SEVEN DAYS SHALL BE ROUGH GRADED AND TEMPORARILY STABILIZED. AREAS DISTURBED BUT INACTIVE FOR MORE THAN THIRTY DAYS SHALL BE TEMPORARILY SEEDED.

4. EROSION AND SEDIMENTATION CONTROLS SHALL BE MAINTAINED UNTIL SUCCESSFUL ESTABLISHMENT OF GROUND COVER.

5. PAVED AREAS SHALL BE KEPT FREE OF SEDIMENT, AND SHALL BE CLEANED PERIODICALLY AS REQUIRED BY CONSTRUCTION ACTIVITIES.

6. CATCH BASINS SHALL BE PERIODICALLY INSPECTED FOR THE ACCUMULATION OF SEDIMENT. ALL CATCH BASINS WITHIN THE PROJECT SHALL BE CLEANED AT THE END OF THE PROJECT.

7. SEDIMENT STOCKPILES SHALL HAVE A SIDE SLOPE OF NO GREATER THAN 2:1. ALL STOCKPILES SHALL BE ROUGH GRADED OR MAINTAIN A ROUGHENED SURFACE TO PREVENT EROSION. STOCKPILES THAT ARE NOT TO BE USED WITHIN 30 DAYS SHALL BE SEEDED AFTER FORMATION OF STOCKPILE AS TO PREVENT EROSION. STRAW BALE BARRIER AND SILT FENCE SHALL BE INSTALLED AROUND STOCKPILE AREA APPROXIMATELY 10 FEET FROM TOE OF SLOPE.

8. THE CONTRACTOR IS RESPONSIBLE TO INSPECT AND REPAIR EROSION AND SEDIMENTATION CONTROL MEASURES AS REQUIRED TO PREVENT DAMAGE OR SEDIMENTATION.

9. UPON COMPLETION OF CONSTRUCTION AND ESTABLISHMENT OF PERMANENT GROUND COVER, REMOVE AND DISPOSE OF TEMPORARY EROSION CONTROL MEASURES. CLEAN SEDIMENT AND DEBRIS FROM TEMPORARY MEASURES AND FROM PERMANENT STORM DRAIN AND SANITARY SEWER SYSTEMS.

SNOW REMOVAL PLAN

1. SNOW SHALL BE STOCKPILED ON AREAS SHOWN ON PLAN.

2. NO SNOW SHALL BE PLACED WITHIN 100' RIVERFRONT BUFFER.

3. NO SNOW SHALL BE PLACED WITHIN THE POROUS PAVEMENT AREA.

4. NO WINTER SANDING SHALL BE CONDUCTED WITHIN THE POROUS PAVEMENT AREA. MINIMAL DE-ICING CHEMICALS MAY ONLY BE USED.

5. DE-ICING CHEMICALS MAY ONLY BE USED ON PEDESTRIAN SURFACES. ALL OTHER PAVED SURFACES MAY HAVE SAND APPLIED.

6. SNOW REMOVAL CONTRACTOR SHALL BE RESPONSIBLE FOR COMPLYING WITH THE ORDER OF CONDITIONS.

7. SNOW REMOVAL SHALL COMPLY WITH THE OPERATION AND MAINTENANCE SCHEDULE FOR THIS PROJECT AREA.

8. EXCESS SNOW SHALL BE REMOVED FROM SITE OR STOCKPILED ONLY WITHIN THE PAVED AREAS ON THE SITE.

OPERATION & MAINTENANCE PLAN POST CONSTRUCTION

SUGGESTED OPERATION AND MAINTENANCE ACTIVITIES AND PROPOSED SCHEDULE AFTER CONSTRUCTION AS FOLLOWS:

1. THE STORMWATER COLLECTION SYSTEMS WILL BE INSPECTED A MINIMUM OF FOUR (4) TIMES PER YEAR TO MAINTAIN PROPER OPERATION. ALL SEDIMENTATION WILL BE REMOVED FROM EACH DEEP SUMP CATCH BASIN A MINIMUM OF FOUR (4) TIMES A YEAR OR WHENEVER THE DEPTH OF DEPOSITS IS GREATER THAN OR EQUAL TO ONE HALF THE DEPTH FROM THE BOTTOM OF THE INVERT OF THE LOWEST PIPE.
2. THE DEEP SUMP CATCH BASINS SHALL BE CLEANED AT THE END OF THE FOLIAGE AND SNOW REMOVAL SEASONS.

3. PAVED SURFACES WILL BE SWEPT TWICE ANNUALLY, APRIL AND OCTOBER, TO REMOVE SAND AND DEBRIS FOLLOWING WINTER MONTHS.

4. SEDIMENT FOREBAYS SHALL BE INSPECTED MONTHLY. THIS WILL INCLUDE CHECKING FOR SIGNS OF RILLING AND GULLYING. ALSO THIS WILL INCLUDE CHECKING FOR THE ACCUMULATION OF SEDIMENTS AND POLLUTANTS. SEDIMENT FOREBAYS SHALL BE CLEANED AT LEAST FOUR TIMES PER YEAR AND WHEN SEDIMENT DEPTH IS BETWEEN 3 TO 6 FEET. WHEN MOWING GRASSES, KEEP THE GRASS HEIGHT NOT GREATER THAN SIX (6) INCHES.

5. AT LEAST TWICE PER YEAR, DURING THE SPRING (APRIL) AND FALL (NOVEMBER), OUTLET STRUCTURES WILL BE EXAMINED AND CLEANED, AND ALL FLOATABLES AND SOLIDS TRAPPED WILL BE REMOVED.

6. ALL STRUCTURES AND PIPES WILL BE INSPECTED EACH SPRING (APRIL) AND FALL (NOVEMBER) FOR ACCUMULATION OF SEDIMENT AND DEBRIS. CLEAN AS REQUIRED.

7. SEDIMENT BASINS SHALL HAVE A DRAINAGE AREA OF NO MORE THAN 100 ACRES. SEDIMENT BASIN VOLUME IS BASED ON 0.5" OF STORAGE FOR EACH ACRE OF DRAINAGE, WHICH IS EQUAL TO 67 CUBIC YARDS OF STORAGE FOR EACH ACRE OF DRAINAGE AREA.

8. VORTECHNICS STORMWATER TREATMENT SYSTEM SHALL BE INSPECTED IN ACCORDANCE WITH MANUFACTURES RECOMMENDATIONS.

9. SUBSURFACE INFILTRATION SYSTEMS WILL BE INSPECTED A MINIMUM OF TWICE ANNUALLY FOR ACCUMULATION OF SILT AND DEBRIS. REFER TO THE CULTEC OPERATION AND MAINTENANCE GUIDELINES FOR MANUFACTURER'S SPECIFICATIONS ON INSPECTION AND MAINTENANCE.

10. WATER QUALITY UNITS SHALL BE INSPECTED EVERY SIX MONTHS FOR THE FIRST YEAR TO DETERMINE THE OIL AND SEDIMENT ACCUMULATION RATE AND INSPECTED FOR SUBSEQUENT YEARS BASED ON THE FIRST-YEAR OBSERVATIONS OR LOCAL REQUIREMENTS. CLEANING IS REQUIRED ONCE SEDIMENT DEPTH REACHES 15% OF STORAGE CAPACITY OR AS REQUIRED BY LOCAL BYLAWS.

NOT FOR CONSTRUCTION

MARGO JONES
Architects
INCORPORATED
308 MAIN STREET, 3rd Flr.
GREENFIELD, MA 01301

Consultants:
FUSS & O'NEILL
78 INTERSTATE DRIVE
WEST SPRINGFIELD, MA 01089
413-452-0445
www.fando.com

EROSION & SEDIMENTATION CONTROL DETAILS

Plains Elementary School
Town of South Hadley
South Hadley, MA

Project:	1108
Date:	05/22/13
Scale:	N.T.S.
Drawn By:	
Revisions:	

DD COST ESTIMATE SET

C3.0

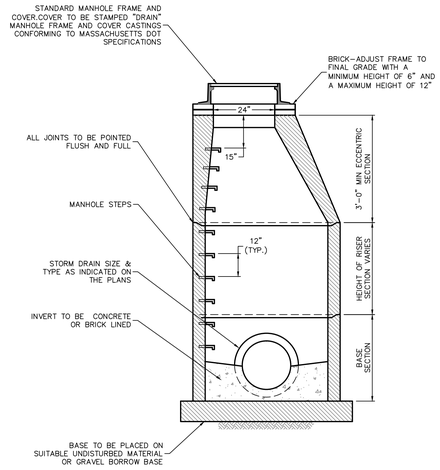

1 DRAINAGE MAHNOLE
SCALE: N.T.S.

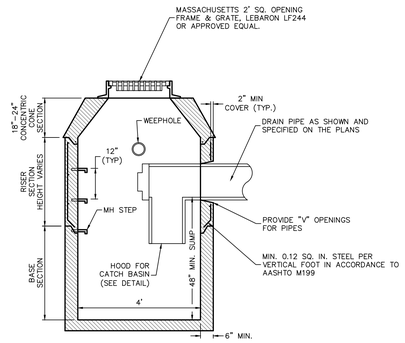

2 PRECAST CONCRETE CATCH BASIN
SCALE: N.T.S.

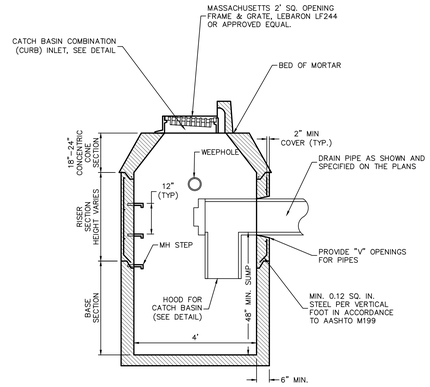

3 PRECAST CONCRETE CATCH BASIN WITH COMBINATION (CURB) INLET
SCALE: N.T.S.

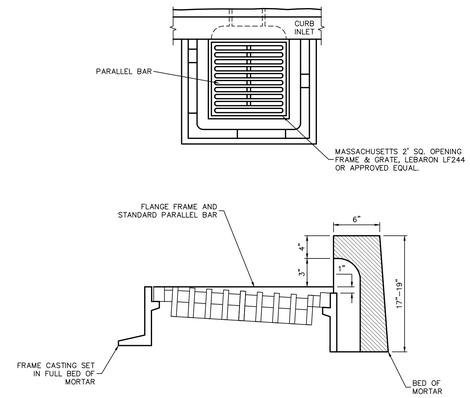

4 CATCH BASIN COMBINATION (CURB) INLET
SCALE: N.T.S.

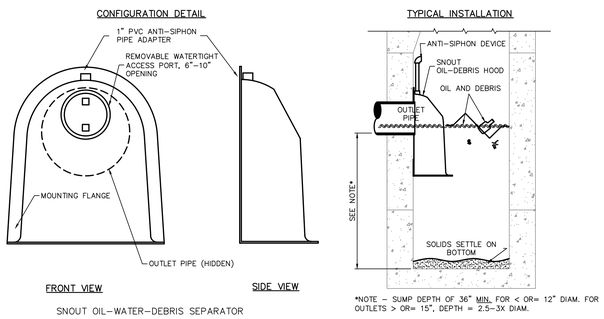

SNOUT OIL–WATER–DEBRIS SEPARATOR

*NOTE – SUMP DEPTH OF 36" MIN. FOR < OR= 12" DIAM. FOR OUTLETS > OR= 15", DEPTH = 2.5–3X DIAM.

INSTALLATION NOTE:

POSITION HOOD SUCH THAT BOTTOM FLANGE IS A DISTANCE OF 1/2 OUTLET PIPE DIAMETER (MIN.) BELOW THE PIPE INVERT. MINUMUM DISTANCE FOR PIPES < 12" I.D. IS 6".

NOTES:

1. ALL HOODS AND TRAPS FOR CATCH BASINS AND WATER QUALITY STRUCTURES SHALL BE MANUFACTURED BY:
   BEST MANAGEMENT PRODUCTS, INC.
   53 MT. ARCHER RD.
   LYME, CT 06371
   (860) 434–0277, (860) 434–3195 FAX
   TOLL FREE: (800) 504–8008 OR (888) 434–0277
   WEB SITE: www.bmpinc.com
   OR PRE–APPROVED EQUAL
2. ALL HOODS SHALL BE CONSTRUCTED OF A GLASS REINFORCED RESIN COMPOSITE WITH ISO GEL COAT EXTERIOR FINISH WITH A MINIMUM 0.125" LAMINATE THICKNESS.
3. ALL HOODS SHALL BE EQUIPPED WITH A WATERTIGHT ACCESS PORT, A MOUNTING FLANGE, AND AN ANTI–SIPHON VENT PIPE AND ELBOW AS DRAWN. (SEE CONFIGURATION DETAIL)
4. THE SIZE AND POSITION OF THE HOOD SHALL BE DETERMINED BY OUTLET PIPE SIZE AS PER MANUFACTURER'S RECOMMENDATION (SNOUT SIZE ALWAYS LARGER THAN PIPE SIZE).
5. THE BOTTOM OF THE HOOD SHALL EXTEND DOWNWARD A MINIMUM DISTANCE EQUAL TO 1/2 THE OUTLET PIPE DIAMETER WITH A MINIMUM DISTANCE OF 6" FOR PIPES <12" I.D.
6. THE ANTI–SIPHON VENT SHALL EXTEND ABOVE HOOD BY MINIMUM OF 3" AND A MAXIMUM OF 12" ACCORDING TO STRUCTURE CONFIGURATION.
7. THE SURFACE OF THE STRUCTURE WHERE THE HOOD IS MOUNTED SHALL BE FINISHED SMOOTH AND FREE OF LOOSE MATERIAL AND PIPE SHALL BE FINISHED FLUSH TO WALL.
8. THE HOOD SHALL BE SECURELY ATTACHED TO STRUCTURE WALL WITH 3/8' STAINLESS STEEL BOLTS AND OIL–RESISTANT GASKET AS SUPPLIED BY MANUFACTURER. (SEE INSTALLATION DETAIL)
9. INSTALLATION INSTRUCTIONS SHALL BE FURNISHED WITH MANUFACTURER SUPPLIED INSTALLATION KIT.
   INSTALLATION KIT SHALL INCLUDE:
   A. INSTALLATION INSTRUCTIONS
   B. PVC ANTI–SIPHON VENT PIPE AND ADAPTER
   C. OIL–RESISTANT CRUSHED CELL FOAM GASKET WITH PSA BACKING
   D. 3/8" STAINLESS STEEL BOLTS
   E. ANCHOR SHIELDS

5 HOOD FOR CATCH BASIN
SCALE: N.T.S.

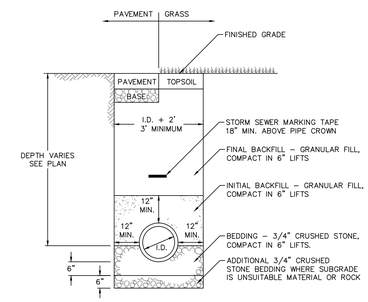

6 STORM SEWER TRENCH
SCALE: N.T.S.

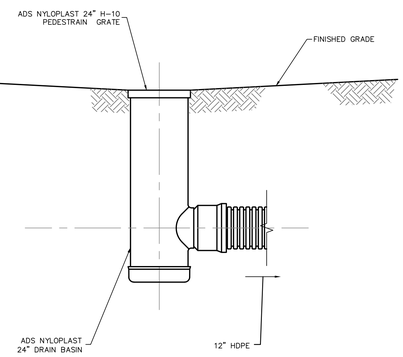

7 YARD DRAIN
SCALE: N.T.S.

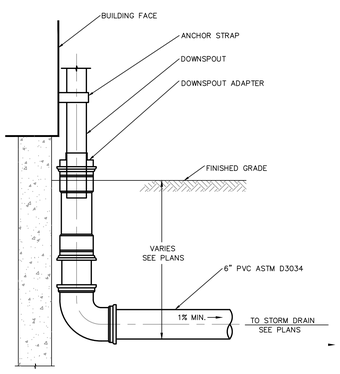

NOTE: COLOR OF ABOVE GROUND PVC PIPE AND FITTINGS SHALL BE COORDINATED WITH THE ARCHITECT TO MATCH BUILDING DOWNSPOUT AND WALL COLORS

8 ROOF LEADER DRAIN CONNECTION
SCALE: N.T.S.

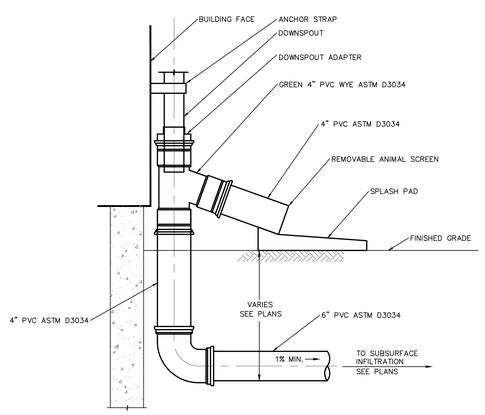

NOTE: COLOR OF ABOVE GROUND PVC PIPE AND FITTINGS SHALL BE COORDINATED WITH THE ARCHITECT TO MATCH BUILDING DOWNSPOUT AND WALL COLORS

9 SURCHARGE ROOF LEADER DRAIN FOR CONNECTION TO SUBSURFACE INFILTRATION
SCALE: N.T.S.

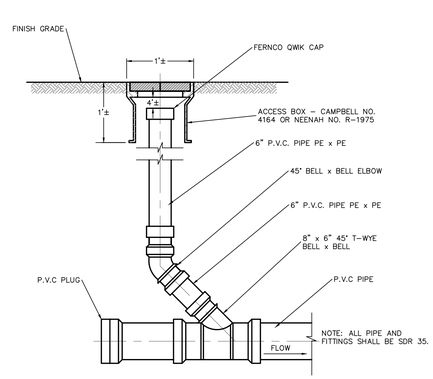

10 TERMINAL CLEAN–OUT
SCALE: N.T.S.

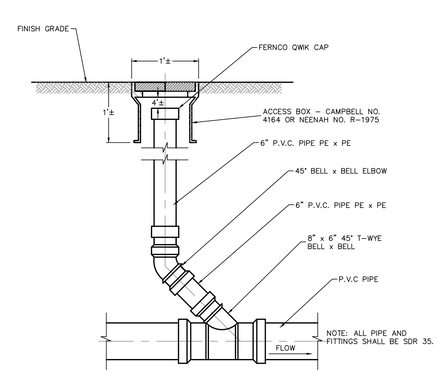

11 IN–LINE CLEAN–OUT
SCALE: N.T.S.

NOT FOR CONSTRUCTION

MARGO JONES
Architects
INCORPORATED
308 MAIN STREET, 3rd Flr.
GREENFIELD, MA 01301

Consultants:
FUSS & O'NEILL
78 INTERSTATE DRIVE
WEST SPRINGFIELD, MA 01089
413-452-0445
www.fuss-o.com

SITE CONSTRUCTION DETAILS

Plains Elementary School
Town of South Hadley
South Hadley, MA

Project:	1108
Date:	05/22/13
Scale:	N.T.S.
Drawn By:	
Revisions:	

DD COST ESTIMATE SET

C3.1

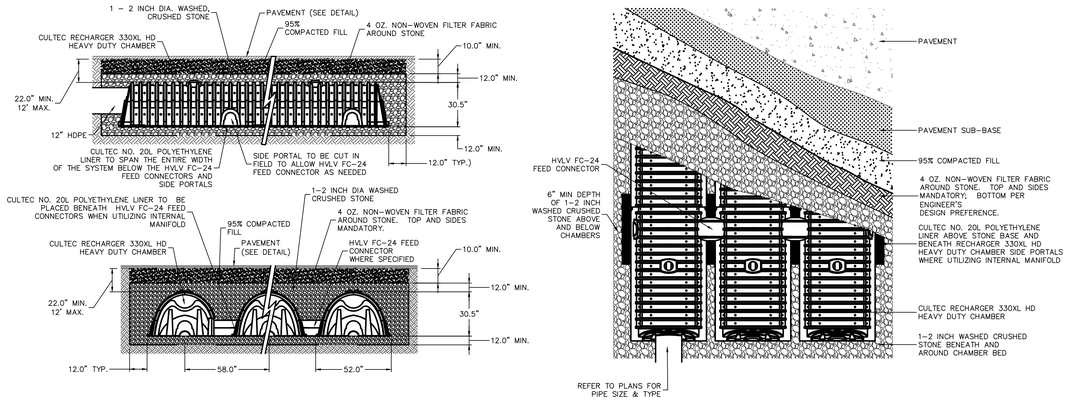

GENERAL NOTES

1. RECHARGER 330XL HD BY CULTEC, INC. OF BROOKFIELD, CT. STORAGE PROVIDED = 11.32 CF/FT PER DESIGN UNIT.
2. REFER TO CULTEC, INC.'S CURRENT RECOMMENDED INSTALLATION GUIDELINES.
3. USE RECHARGER 330XL HD HEAVY DUTY FOR TRAFFIC AND/OR H–25 APPLICATIONS.
4. ALL RECHARGER 330XL HD HEAVY DUTY UNITS ARE MARKED WITH A COLOR STRIPE FORMED INTO THE PART ALONG THE LENGTH OF THE CHAMBER.
5. ALL RECHARGER 330XL HD CHAMBERS MUST BE INSTALLED IN ACCORDANCE WITH ALL APPLICABLE LOCAL, STATE AND FEDERAL REGULATIONS.

X SUBSURFACE INFILTRATION SYSTEM (TYP.) – CULTEC RECHARGER 330 XLHD CHAMBERS
SCALE: N.T.S.

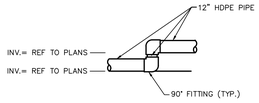

ELEVATION

X HIGH LEVEL OVERFLOW PIPE
SCALE: N.T.S.

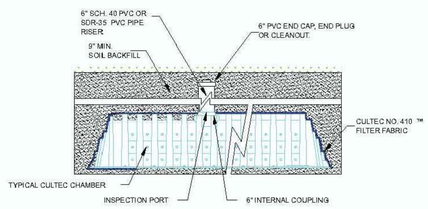

X TYPICAL INSPECTION PORT DETAIL FOR NON–TRAFFIC APPLICATION
SCALE: N.T.S.

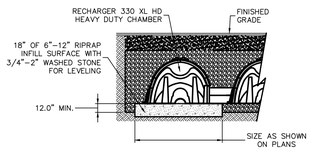

X SUBSURFACE INFILTRATION SYSTEM INLET PROTECTION
SCALE: N.T.S.

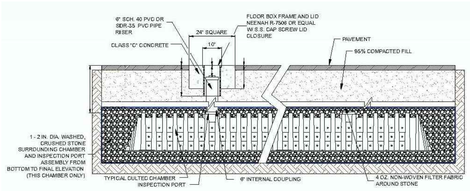

NOTE: TO BE USED IN LOCATIONS WHERE INSPECTION PORT IS LOCATED IN FIRE LINE OR ANY PAVED SURFACE

X TYPICAL INSPECTION PORT DETAIL FOR TRAFFIC APPLICATION
SCALE: N.T.S.

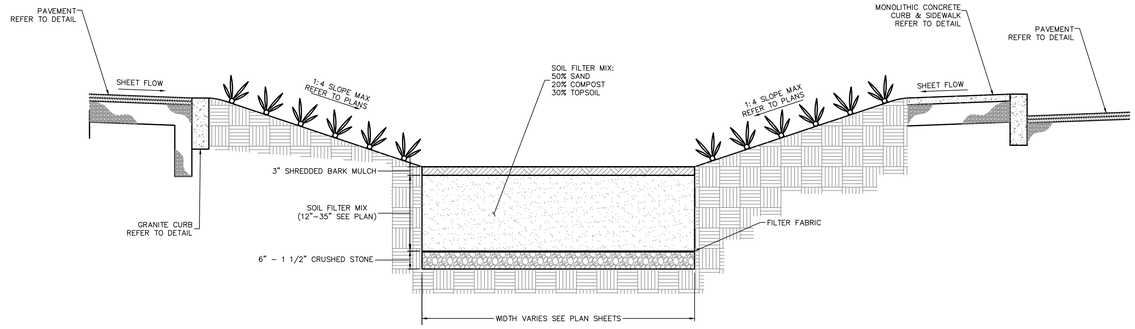

NOTE: REFER TO LANDSCAPING PLANS FOR PLANT TYPES, LOCATIONS AND QUANTITIES

X RAINGARDEN CROSS SECTION
SCALE: N.T.S.

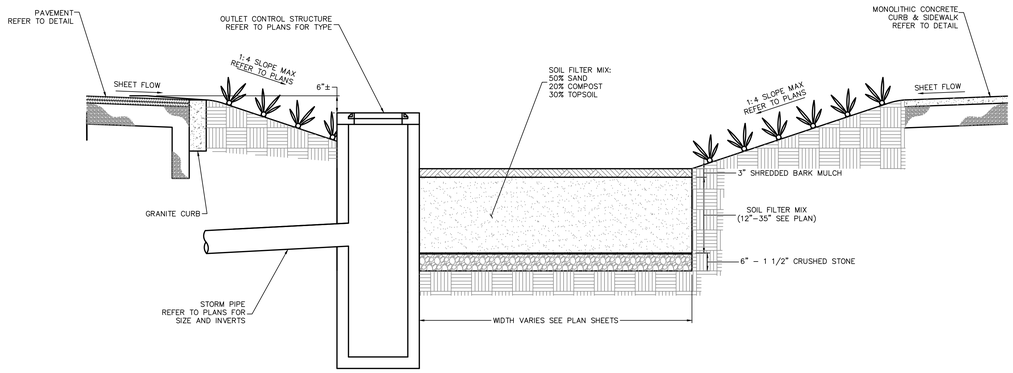

NOTE: REFER TO LANDSCAPING PLANS FOR PLANT TYPES, LOCATIONS AND QUANTITIES

X RAINGARDEN CROSS SECTION AT CATCH BASIN
SCALE: N.T.S.

NOT FOR CONSTRUCTION

MARGO JONES Architects INCORPORATED
308 MAIN STREET, 3rd Flr.
GREENFIELD, MA 01301

Consultants:
FUSS & O'NEILL
78 INTERSTATE DRIVE
WEST SPRINGFIELD, MA 01089
413-452-0445
www.fando.com

CONSTRUCTION DETAILS

Plains Elementary School
Town of South Hadley
South Hadley, MA

Project:	1108
Date:	05/22/13
Scale:	N.T.S.
Drawn By:	
Revisions:	

DD COST ESTIMATE SET

C3.2

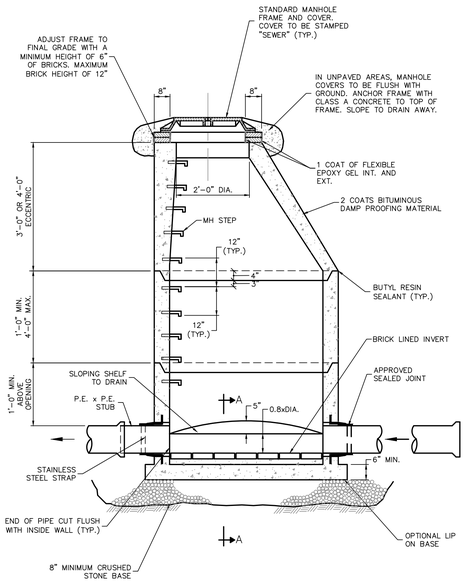

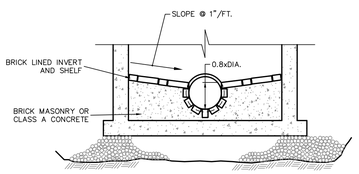

SECTION A–A

NOTE:

DETAIL SHOWN FOR ILLUSTRATIVE PURPOSES ONLY. INSTALLATION OF SANITARY SEWERS SHALL BE COORDINATED WITH THE CITY/TOWN PUBLIC WORKS.

1 SANITARY MANHOLE
SCALE: N.T.S.

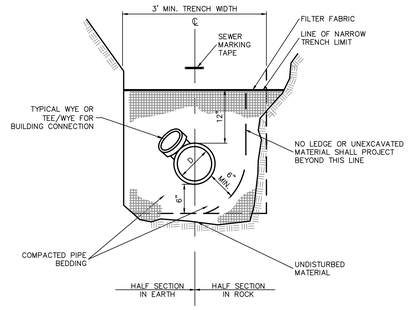

NOTE:

DETAIL SHOWN FOR ILLUSTRATIVE PURPOSES ONLY. INSTALLATION OF SANITARY SEWERS SHALL BE COORDINATED WITH THE TOWN/CITY PUBLIC WORKS.

2 SANITARY SEWER TRENCH
SCALE: N.T.S.

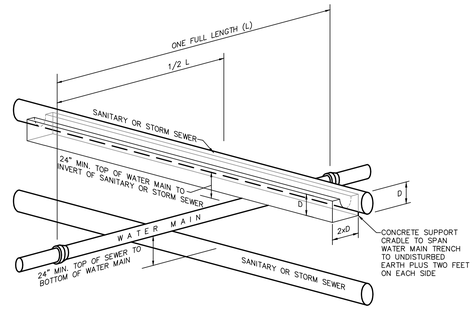

NOTES:

IF 24" VERTICAL SEPARATION CAN NOT BE ACHIEVED AT LOCATIONS OF WATER MAIN & SEWER CROSSINGS, CONTRACTOR SHALL CONSTRUCT EITHER OF THE FOLLOWING OPTIONS:

1. CONSTRUCT SANITARY SEWER OF PVC PRESSURE PIPE MATERIAL 10' ON EACH SIDE OF THE WATER MAIN/STORM SEWER AND TEST PROPOSE SANITARY SEWER AT 150 PSI PRESSURE.
2. ENCASE SEWER PIPE IN CONCRETE, 4' DISTANCE ON EACH SIDE OF WATER MAIN/ STORM SEWER CROSSING. CONCRETE ENCASEMENT SHALL BE MINIMUM 6" ALL AROUND PROPOSED SEWER PIPE.

3 SECTION WATER/SEWER SEPARATION REQUIREMENTS
SCALE: N.T.S.

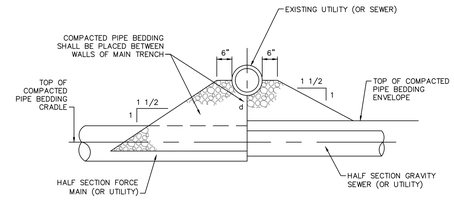

TYPE A (d > 12")

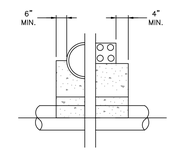

HALF SECTION

NOTE:

ALL PIPE AND FITTINGS SHALL BE SDR 35.

PLAN VIEW

4 SANITARY SEWER PIPE LAYOUT @ 90° TURNS
SCALE: N.T.S.

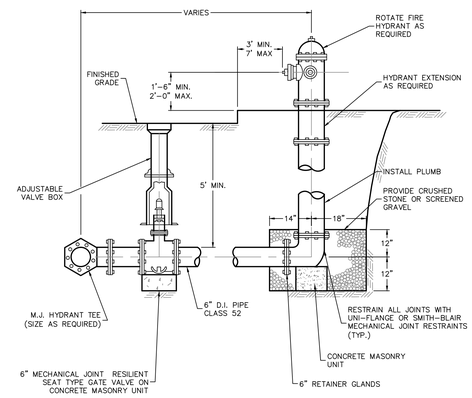

NOTE: LEAVE HYDRANT DRAINS OPEN.

5 HYDRAND AND VALVE DETAIL
SCALE: N.T.S.

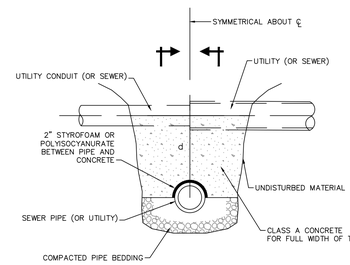

TYPE B (d < 12")

UTILITY SUPPORT NOTES

1. d=DISTANCE FROM TOP OF SEWER PIPE TO THE BOTTOM OF THE UTILITY PIPE
2. SUPPORTS TO BE LOCATED AS SHOWN ON THE DRAWINGS OR AS DIRECTED BY THE ENGINEER

6 TYPICAL SUPPORT FOR UTILITIES
SCALE: N.T.S.

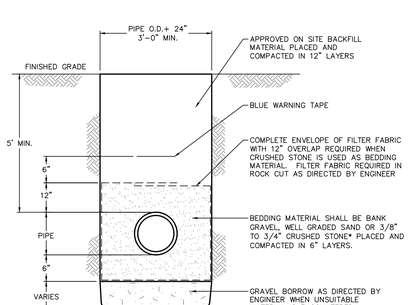

*CRUSHED STONE SHALL BE USED IN HIGH GROUNDWATER CONDITIONS AS DIRECTED BY THE ENGINEER.

7 WATER MAIN TRENCH
SCALE: N.T.S.

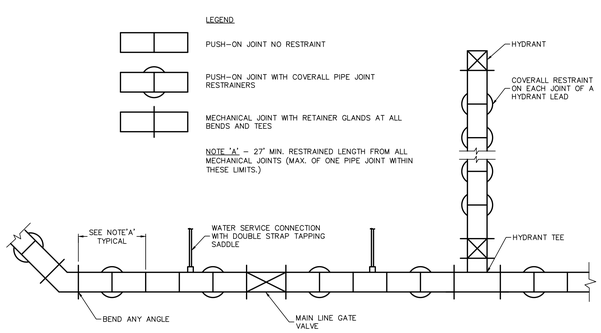

8 WATER MAIN JOINT RESTRAINT
SCALE: N.T.S.

NOT FOR CONSTRUCTION

MARGO JONES Architects INCORPORATED
308 MAIN STREET, 3rd Flr.
GREENFIELD, MA 01301

Consultants:
FUSS & O'NEILL
78 INTERSTATE DRIVE
WEST SPRINGFIELD, MA 01089
413-452-0445
www.fando.com

CONSTRUCTION DETAILS

Plains Elementary School
Town of South Hadley
South Hadley, MA

Project:	1108
Date:	05/22/13
Scale:	N.T.S.
Drawn By:	
Revisions:	

DD COST ESTIMATE SET

C3.3

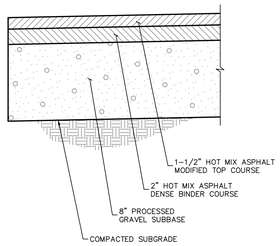

1 TYPICAL PAVEMENT SECTION
SCALE: N.T.S.

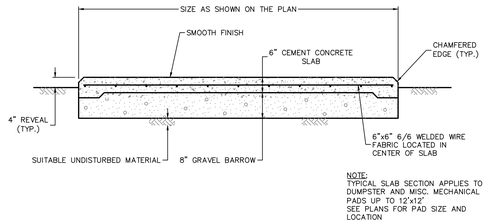

2 CONCRETE EQUIPMENT PAD TYPICAL SECTION
SCALE: N.T.S.

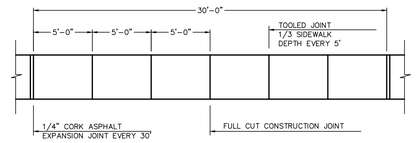

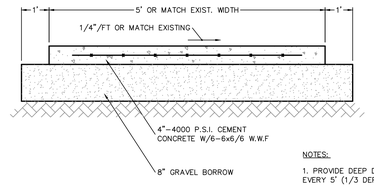

NOTES:

1. PROVIDE DEEP DUMMY JOINT EVERY 5' (1/3 DEPTH OF SLAB)
2. REPLACE 1/4" EXPANSION JOINT IF EXISTING JOINT FALLS WITHIN RECONSTRUCTION.

3 CONCRETE SIDEWALK
SCALE: N.T.S.

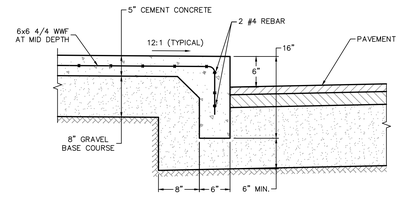

4 MONOLITHIC CONCRETE CURB AND WALK DETAIL
SCALE: N.T.S.

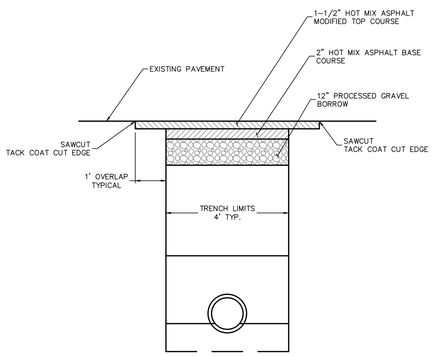

5 PERMANENT PAVEMENT REPAIR
SCALE: N.T.S.

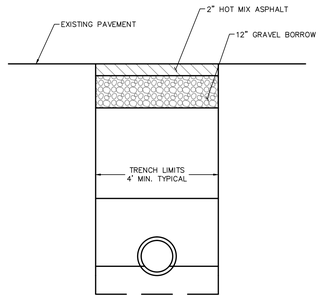

6 TEMPORARY PAVEMENT REPAIR
SCALE: N.T.S.

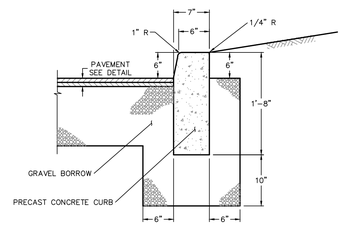

NOTES:

1. 1 INCH DEEP BEVELED JOINT AT TOP AND FACE OF CURB.
2. FULL DEPTH EVERY 10 FEET. 1/2 INCH EXPANSION JOINT AND FILLER EVERY 30 FEET.
3. 1/2 INCH EXPANSION JOINT AND FILLER WHEN CURB IS ADJACENT TO CONCRETE SIDEWALK.

7 CONCRETE CURB
SCALE: N.T.S.

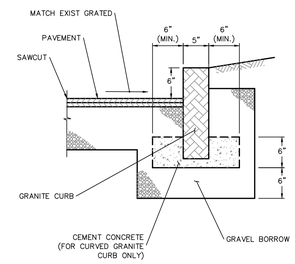

NOTES:

1. LENGTH OF CURB VARIES TO FIT RADIUS. 2 FT. MIN.
2. ENDS SHALL BE SQUARE TO TOP AND RADIAL TO FACE.
3. BUTT ENDS TOGETHER AS CLOSE AS POSSIBLE. MAXIMUM SPACE OF 1/2" ALLOWED. 8" DOWN FROM TOP. JOINT SHALL BE MORTARED FULL DEPTH.
4. 1/2" EXPANSION JOINT EVERY 50± FEET.
5. CURBS TO BE SET ON A RADIUS OF 100 FEET OR LESS SHALL BE CUT TO THE CURVE REQUIRED, AND THEIR ENDS CUT ON RADIAL LINES.
6. 1/2" EXPANSION JOINT AND FILLER WHEN CURB IS ADJACENT TO CONCRETE SIDEWALK.

8 GRANITE CURB
SCALE: N.T.S.

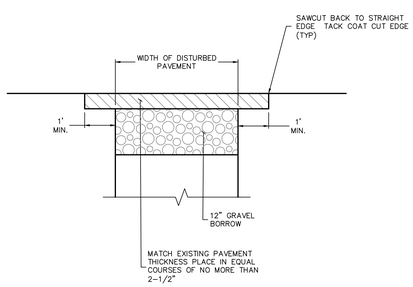

9 TOWN ROAD PAVEMENT REPAIR
SCALE: N.T.S.

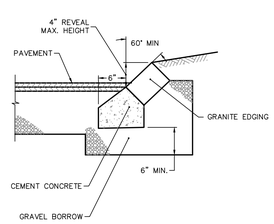

NOTES:

1. LENGTH OF CURB VARIES TO FIT RADIUS. 2 FT. MIN AND 6 FEET MAX.
2. ENDS SHALL BE SQUARE TO TOP AND RADIAL TO FACE.
3. BUTT ENDS TOGETHER AS CLOSE AS POSSIBLE. MAXIMUM SPACE OF 1/2" ALLOWED. 8" DOWN FROM TOP. JOINT SHALL BE MORTARED FULL DEPTH.
4. 1/2" EXPANSION JOINT EVERY 50± FEET.
5. CURBS TO BE SET ON A RADIUS OF 100 FEET OR LESS SHALL BE CUT TO THE CURVE REQUIRED, AND THEIR ENDS CUT ON RADIAL LINES.
6. 1/2" EXPANSION JOINT AND FILLER WHEN CURB IS ADJACENT TO CONCRETE SIDEWALK.

10 SLOPED GRANITE EDGING – TYPE SB
SCALE: N.T.S.

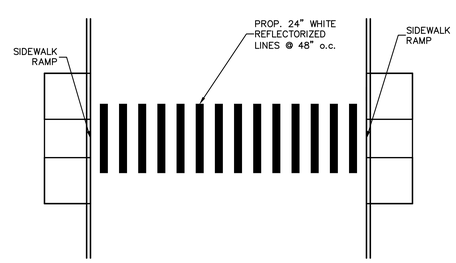

8 PEDESTRAIN CROSSWALK
SCALE: N.T.S.

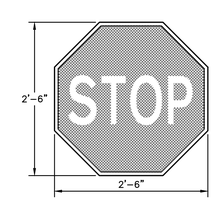

STOP SIGN PER MUTCD (R1-1)
N.T.S.

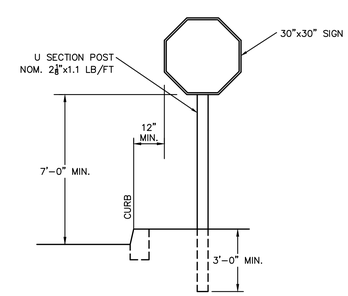

TYPICAL POST DETAIL
N.T.S.

9 STOP SIGN R1-1
SCALE: N.T.S.

NOT FOR CONSTRUCTION

MARGO JONES
Architects
INCORPORATED
308 MAIN STREET, 3rd Flr.
GREENFIELD, MA 01301

Consultants:
FUSS & O'NEILL
78 INTERSTATE DRIVE
WEST SPRINGFIELD, MA 01089
413-452-0445
www.fando.com

CONSTRUCTION DETAILS

Plains Elementary School
Town of South Hadley
South Hadley, MA

Project:	1108
Date:	05/22/13
Scale:	N.T.S.
Drawn By:	
Revisions:	

DD COST ESTIMATE SET

C3.4

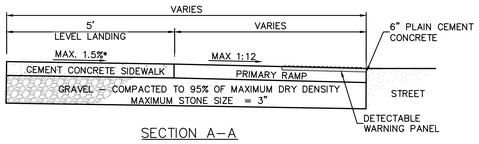

SECTION A–A

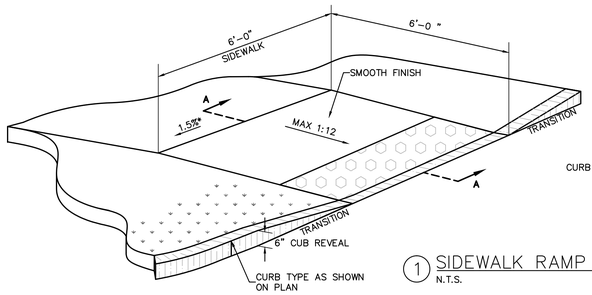

1 SIDEWALK RAMP A
N.T.S.

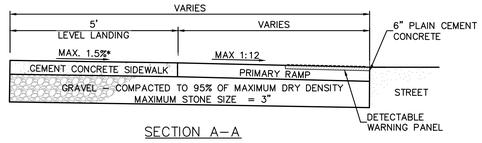

SECTION A–A

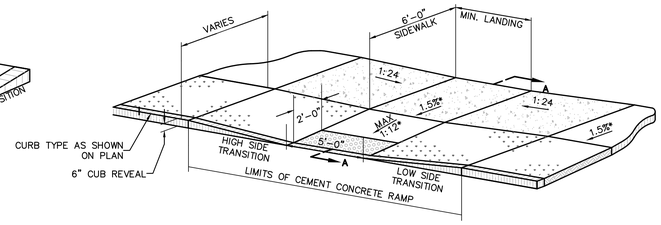

2 SIDEWALK RAMP B
N.T.S.

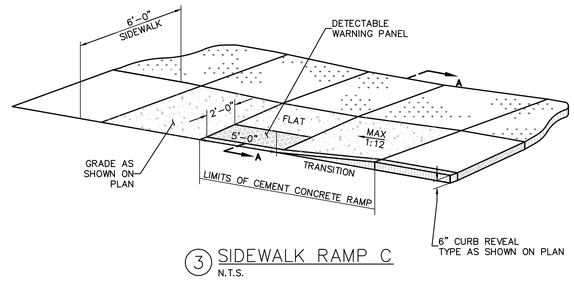

3 SIDEWALK RAMP C
N.T.S.

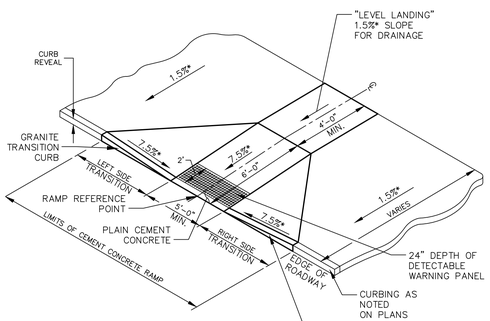

NOTES:
- SEE CONSTRUCTION STANDARD E 107.3.0 AND E 107.6.5
- * CONSTRUCTION TOLERANCE ± 0.5%
- ** SIDEWALK ENDS
- *** SEE CONSTRUCTION STANDARD E 107.9.0

4 TYPE C SIDEWALK RAMP
SCALE: N.T.S.

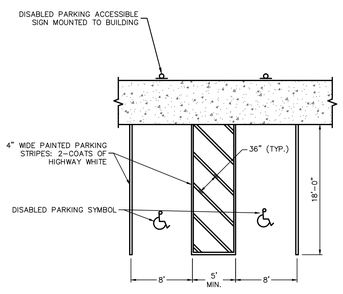

5 DISABLED PARKING STALL
SCALE: N.T.S.

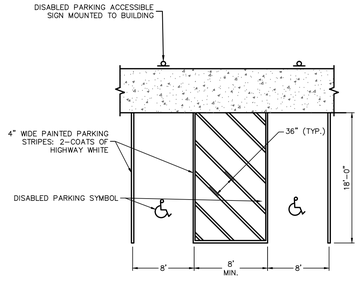

6 VAN ACCESSIBLE DISABLED PARKING STALL
SCALE: N.T.S.

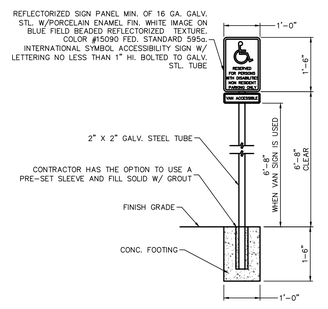

NOTES
1. SYMBOL PAINTED HIGHWAY WHITE (TWO COATS)

7 HANDICAP SYMBOL
SCALE: N.T.S.

10 DISABLED PARKING SIGN
SCALE: N.T.S.

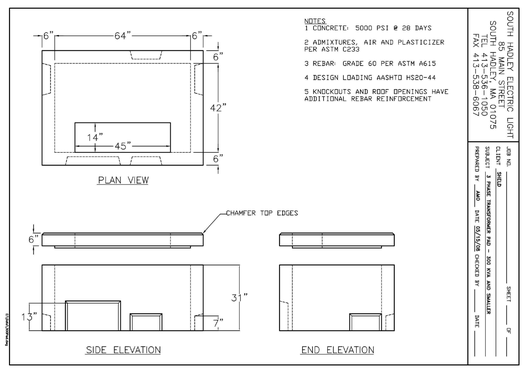

NOTES:
1 CONCRETE: 5000 PSI @ 28 DAYS
2 ADMIXTURES, AIR AND PLASTICIZER PER ASTM C233
3 REBAR: GRADE 60 PER ASTM A615
4 DESIGN LOADING AASHTO HS20-44
5 KNOCKOUTS AND ROOF OPENINGS HAVE ADDITIONAL REBAR REINFORCEMENT

SOUTH HADLEY ELECTRIC LIGHT
85 MAIN STREET
SOUTH HADLEY, MA 01075
TEL 413-536-1005
FAX 413-536-6067

DRN NO. 5HT6B
CLIENT
SUBJECT 3 PHASE TRANSFORMER PAD – 500 KVA AND SMALLER
PREPARED BY JMC DATE 02/03/09 CHECKED BY DATE
SHEET OF

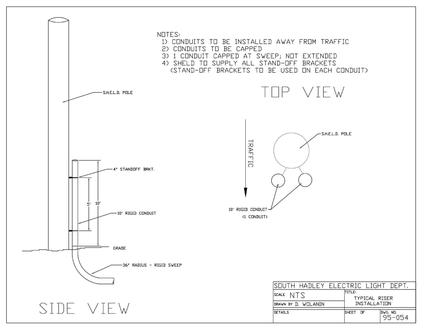

SOUTH HADLEY ELECTRIC LIGHT DEPT.
SCALE NTS
TYPICAL RISER INSTALLATION
DRAWN BY D. WOLANIN
DETAILS
SHEET OF
DWG. NO. 99-054

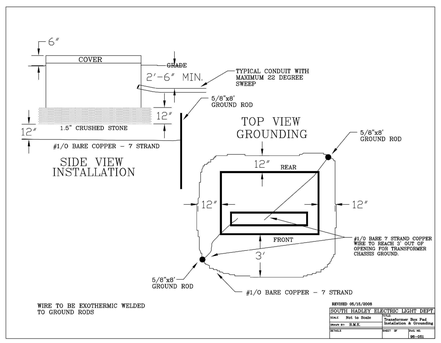

REVISED 06/15/2006
SOUTH HADLEY ELECTRIC LIGHT DEPT.
SCALE Not to Scale
Transformer Box Pad Installation & Grounding
DRAWN BY R.M.D.
DETAILS
SHEET OF
DWG. NO. DR-105

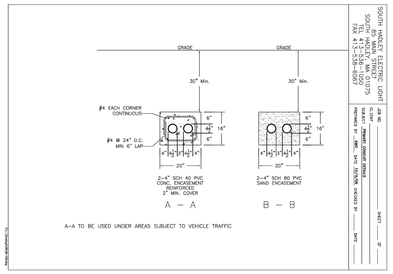

SOUTH HADLEY ELECTRIC LIGHT DEPT.
85 MAIN STREET
SOUTH HADLEY, MA 01075
TEL 413-536-1005
FAX 413-536-6067

DRN NO.
CLIENT
SUBJECT 4 CONCRETE WORK
PREPARED BY JMC DATE 02/03/09 CHECKED BY DATE
SHEET OF

NOT FOR CONSTRUCTION

MARGO JONES
Architects
INCORPORATED
308 MAIN STREET, 3rd Flr.
GREENFIELD, MA 01301

Consultants:
FUSS & O'NEILL
78 INTERSTATE DRIVE
WEST SPRINGFIELD, MA 01089
413-452-0445
www.fuss-o.com

CONSTRUCTION DETAILS

Plains Elementary School
Town of South Hadley
South Hadley, MA

Project:	1108
Date:	05/22/13
Scale:	N.T.S.
Drawn By:	
Revisions:	

DD COST ESTIMATE SET

C3.5