LEGEND & STANDARD ABBREVIATIONS

- PROPOSED MAJOR CONTOURS
- PROPOSED MINOR CONTOURS
- PROPOSED PAVEMENT
- PROPOSED CURB
- PROPOSED STORMWATER DRAINAGE LINE
- PROPOSED ROOF LEADERS
- PROPOSED CLEAN-OUT
- PROPOSED DRAINAGE MANHOLE
- PROPOSED CATCH BASIN
- PROPOSED STORMWATER TREATMENT SYSTEM
- PROPOSED INFILTRATION UNIT INSPECTION PORT
- PROPOSED SUBSURFACE INFILTRATION SYSTEM
- PROPOSED SUBSURFACE INFILTRATION INLET PROTECTION
- RIP RAP
- X 450.8 — PROPOSED SPOT GRADE
- CB — CATCH BASIN
- DMH — DRAINAGE MANHOLE
- TYP. — TYPICAL
- MIN. — MINIMUM
- INV. — INVERT
- TC — TOP OF CURB
- BC — BOTTOM OF CURB
- ELEV. — ELEVATION
- FE — FLARED END

EROSION AND SEDIMENTATION CONTROL

1. INSTALL EROSION CONTROL BLANKETS ON ALL SLOPES 3:1 AND GREATER.
2. REFER TO EROSION AND SEDIMENTATION CONTROL DETAILS FOR ADDITIONAL EROSION AND SEDIMENTATION CONTROL NOTES.

UTILITIES

1. TERMINATE EXISTING UTILITIES IN CONFORMANCE WITH LOCAL, STATE AND INDIVIDUAL UTILITY COMPANY STANDARD SPECIFICATIONS AND DETAILS. COORDINATE UTILITY SERVICE DISCONNECTS WITH UTILITY REPRESENTATIVES.
2. THE TYPE, SIZE AND LOCATION OF DEPICTED UNDERGROUND UTILITIES ARE APPROXIMATE REPRESENTATIONS OF INFORMATION OBTAINED FROM FIELD LOCATIONS OF VISIBLE FEATURES, EXISTING MAPS AND PLANS OF RECORD, UTILITY MAPPING, AND OTHER SOURCES OF INFORMATION OBTAINED BY THE ENGINEER. ASSUME NO GUARANTEE AS TO THE COMPLETENESS, SERVICEABILITY, EXISTENCE, OR ACCURACY OF UNDERGROUND FACILITIES. FIELD VERIFY THE EXACT LOCATIONS, SIZES, AND ELEVATIONS OF THE POINTS OF CONNECTIONS TO EXISTING UTILITIES.
3. PAY ALL FEES AND COSTS ASSOCIATED WITH UTILITY MODIFICATIONS AND CONNECTIONS, REGARDLESS OF THE ENTITY THAT PERFORMS THE WORK.
4. COORDINATE THE WORK AND WORK SCHEDULE WITH UTILITY COMPANIES. PROVIDE ADEQUATE NOTICE TO UTILITIES TO PREVENT DELAYS IN CONSTRUCTION.
5. INSTALL PROPOSED PRIVATE UTILITY SERVICES ACCORDING TO THE REQUIREMENTS PROVIDED BY, AND APPROVED BY THE AUTHORITY HAVING JURISDICTION (WATER, SEWER, GAS, TELEPHONE, ELECTRIC, FIRE ALARM, ETC.). COORDINATE FINAL DESIGN LOADS AND LOCATIONS WITH OWNER AND ARCHITECT.
6. REMOVAL OF OVERHEAD WIRE AND POLES SHALL BE COORDINATED BY THE CONTRACTOR.
7. THE PLUMBING CONTRACTOR IS RESPONSIBLE FOR INSTALLATION OF DRAINAGE AND UTILITIES WITHIN 10 FEET OF BUILDING FOOTPRINT.
8. NOTIFY ABUTTING PROPERTY OWNERS AND THE TOWN OF SOUTH HADLEY NAME 24 HOURS PRIOR TO DISRUPTION OF UTILITY SERVICE.
9. ALL WATER SERVICE CONNECTIONS SHALL BE COORDINATED WITH THE TOWN OF OF SOUTH HADLEY DPW.

NOT FOR CONSTRUCTION

MARGO JONES
Architects
INCORPORATED
308 MAIN STREET, 3rd Flr.
GREENFIELD, MA 01301

Consultants:
FUSS & O'NEILL
78 INTERSTATE DRIVE
WEST SPRINGFIELD, MA 01089
413-452-0445
www.fuss-o.com

SITE GRADING & DRAINAGE PLAN

Plains Elementary School
Town of South Hadley
South Hadley, MA

Project:	1108
Date:	06/20/2013
Scale:	1" = 30'
Drawn By:	ATB/DFD
Revisions:	07/08/2013

C1.6

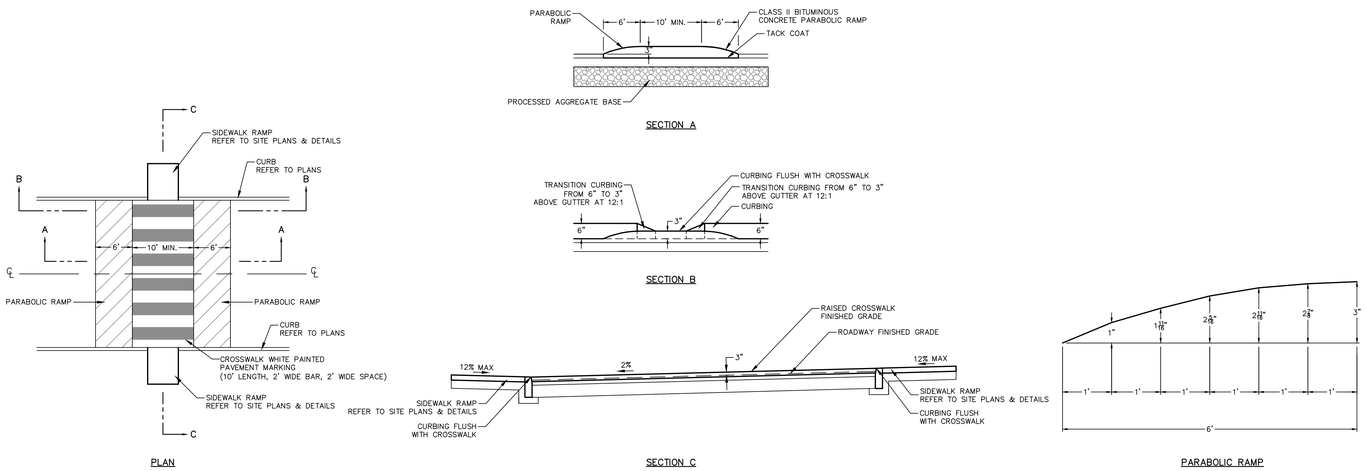

1 RAISED PEDESTRIAN CROSSWALK
SCALE: N.T.S.

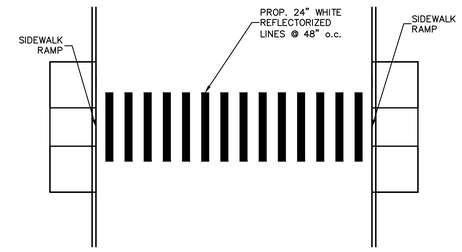

2 PEDESTRIAN CROSSWALK
SCALE: N.T.S.

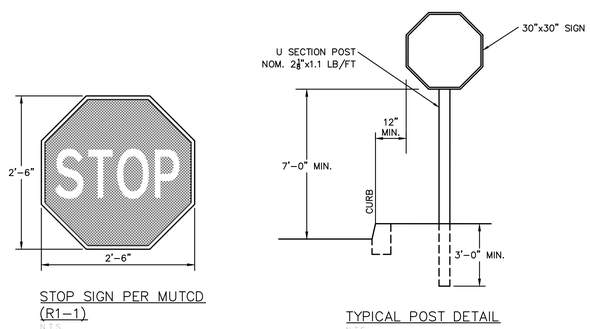

3 STOP SIGN R1-1
SCALE: N.T.S.

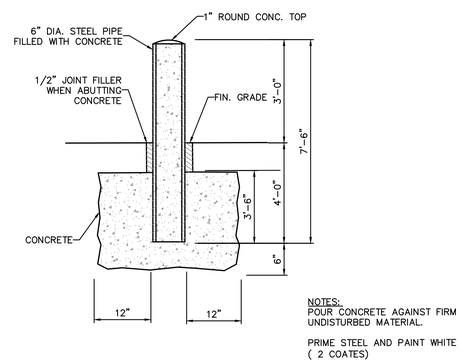

4 STEEL PIPE FILLED CONCRETE BOLLARD
SCALE: N.T.S.

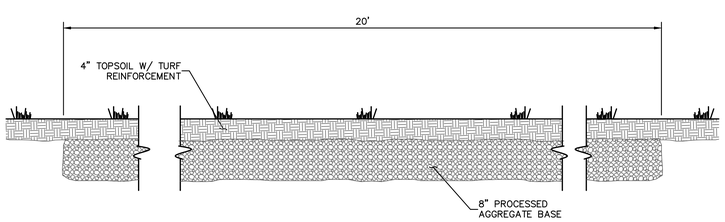

5 EMERGENCY ACCESS ROAD
SCALE: N.T.S.

NOT FOR CONSTRUCTION

MARGO JONES
Architects
INCORPORATED
308 MAIN STREET, 3rd Flr.
GREENFIELD, MA 01301

Consultants:
FUSS & O'NEILL
78 INTERSTATE DRIVE
WEST SPRINGFIELD, MA 01089
413-452-0445
www.fuss-o.com

CONSTRUCTION DETAILS

Plains Elementary School
Town of South Hadley
South Hadley, MA

Project:	1108
Date:	06/20/2013
Scale:	N.T.S.
Drawn By:	
Revisions:	07/08/2013

C3.5