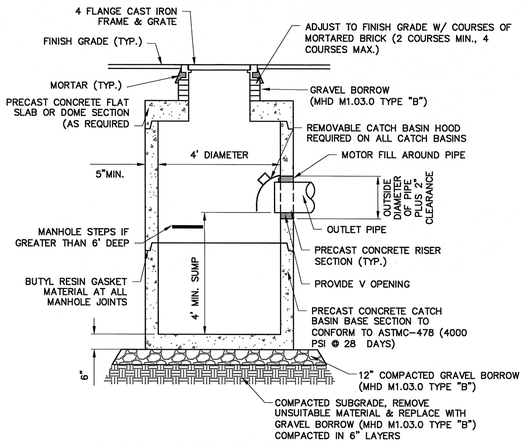

TYPICAL CATCH BASIN DETAIL

NOT TO SCALE

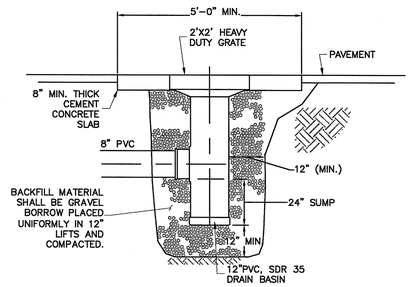

AREA DRAIN

NOT TO SCALE

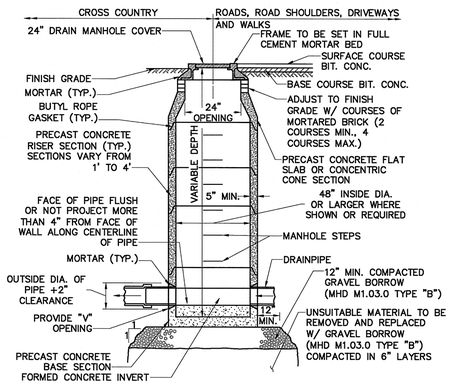

TYPICAL DRAIN MANHOLE DETAIL

NOT TO SCALE

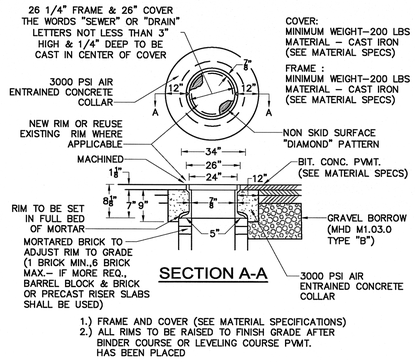

1.) FRAME AND COVER (SEE MATERIAL SPECIFICATIONS)
2.) ALL RIMS TO BE RAISED TO FINISH GRADE AFTER BINDER COURSE OR LEVELING COURSE PVMT. HAS BEEN PLACED

MANHOLE FRAME, COVER & SETTING DETAIL

NOT TO SCALE

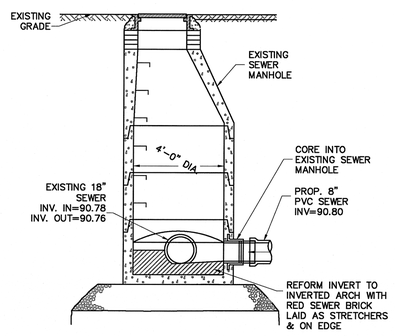

SEWER MANHOLE CONNECTION

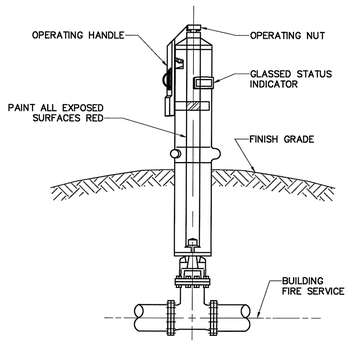

POST INDICATOR VALVE DETAIL

NOT TO SCALE

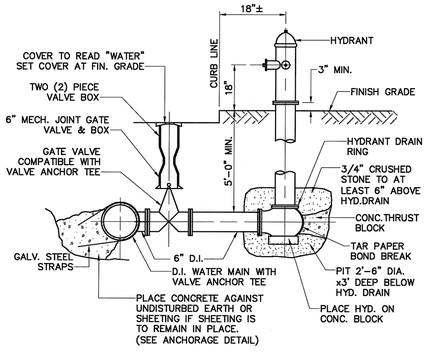

NOTE: ALL JOINTS ON HYDRANT BRANCH TO BE RESTRAINED JOINTS

FIRE HYDRANT DETAIL

NOT TO SCALE

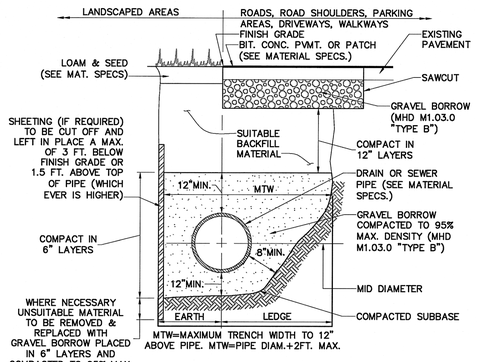

STANDARD TRENCH DETAIL FOR UTILITY PIPE

NOT TO SCALE

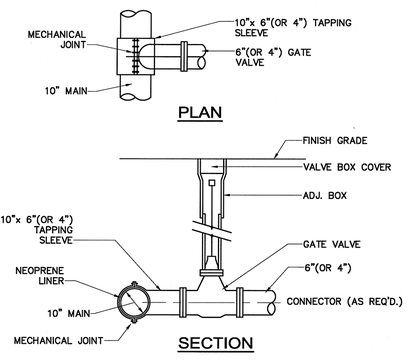

TAPPING SLEEVE, VALVE & BOX DETAIL

NOT TO SCALE

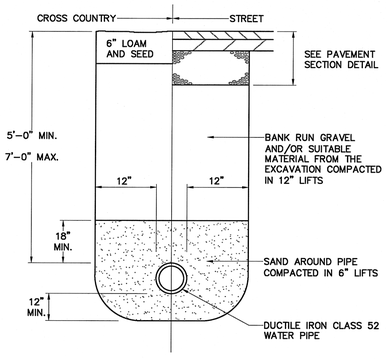

WATER TRENCH DETAIL

NOT TO SCALE

Nitsch Engineering

www.nitscheng.com
186 Lincoln Street, Suite 200
Boston, MA 02111-2403
T: (617) 338-0063
F: (617) 338-6472

- Civil Engineering
- Land Surveying
- Transportation Engineering
- Planning
- GIS Services

JOHNSON ROBERTS ASSOCIATES INC.
ARCHITECTS
15 PROPERZI WAY
SOMERVILLE, MA
01243 - 3228

COMMONWEALTH OF MASSACHUSETTS
TIMOTHY J. McGIVERN
CIVIL
No. 47569
REGISTERED PROFESSIONAL ENGINEER
11/27/2012

Revisions:

PERMIT SET 11/21/2012

SOUTH HADLEY LIBRARY

SOUTH HADLEY, MA

Sheet Title:

DETAILS

Date: 21-NOV-12 Drawn By:

Scale: AS NOTED Project No.:

C-7