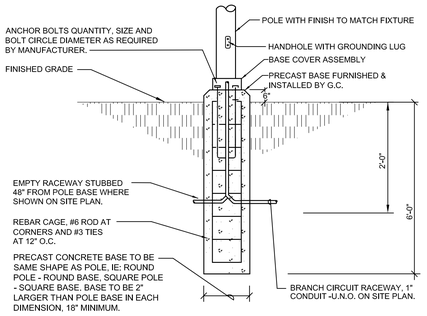

2 / E0.3 TYPE "SL1/5L" POLE BASE DETAIL

SCALE: N.T.S

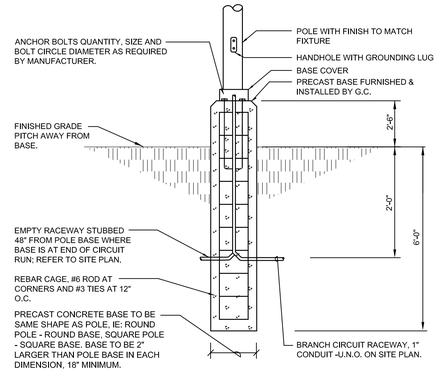

3 / E0.3 TYPE "SL2/4L" POLE BASE DETAIL

SCALE: N.T.S.

SITE NOTES:

1. DO NOT RUN ANY UNDERGROUND RACEWAYS WITHIN PLANTING AREAS OR LEACHING FIELDS. REFER TO DRAWINGS FOR LOCATIONS. COORDINATE ROUTING WITH LANDSCAPE ARCHITECT.
2. REFER TO CIVIL DRAWINGS FOR EXACT ROUTING OF UTILITIES. REFER TO LANDSCAPE DRAWINGS FOR EXACT LOCATION OF ALL SITE FIXTURES.
3. PROVIDE GROUND MOUNTED PULL BOX EQUAL TO QUAZITE #PC1212BA12 WITH COVER #PC1212CA17. RUN ALL SITE LIGHTING VIA PULL BOX. ALSO PROVIDE (1) 1"SPARE WITH PULL LINE BETWEEN PULL BOX AND ELECTRIC ROOM INDICATED. LABEL CONDUIT / PULL LINE AT EACH END.
4. REFER TO ARCHITECTURAL ELEVATIONS FOR EXACT LOCATION OF EXTERIOR WALL MOUNTED LIGHTING.
5. REMOVE ALL EXISTING SITE ELECTRICS WHEN NO LONGER REQUIRED.ELECTRICAL CONTRACTOR SHALL COORDINATE WITH LOCAL UTILITY COMPANIES FOR DISCONNECTION AND REMOVAL OF EXISTING SITE UTILITIES.
6. ALL SITE WIRING SHALL BE MINIMUM 2#8 & 1#10G - 1"C UNLESS SHOWN OTHERWISE.
7. ALL EXTERIOR LIGHTING TO BE PROGRAMMED FOR PHOTOCELL "ON" AND TIMED "OFF". PROVIDE INDIVIDUAL CONTROL FOR EACH CIRCUIT. REFER TO ALCS ONE-LINE DIAGRAM, NOTES, AND SPECIFICATION.
8. PROVIDE A LIGHTING PROTECTION SYSTEM FOR ENTIRE FACILITY, REFER TO SPECIFICATION.
9. PROVIDE A 1" CONDUIT STUB-OUT FROM EACH POLE BASE AT THE END OF A CIRCUIT RUN. REFER TO BASE DETAILS FOR LENGTH OF STUB-OUT.
10. WIRING FOR TYPE SL6 (PROVIDED BY OTHERS) SHALL BE ROUTED INSIDE THE FLAGPOLE. COORDINATE POINT OF ENTRY AND WIRING METHODS INTERNAL TO POLE WITH THE GENERAL CONTRACTOR.

SITE LIGHTING WIRING:

1. 2#8&#10G AWG, 1" PVC, 24" BELOW GRADE.
2. 4#8&#10G AWG, 1" PVC, 24" BELOW GRADE.

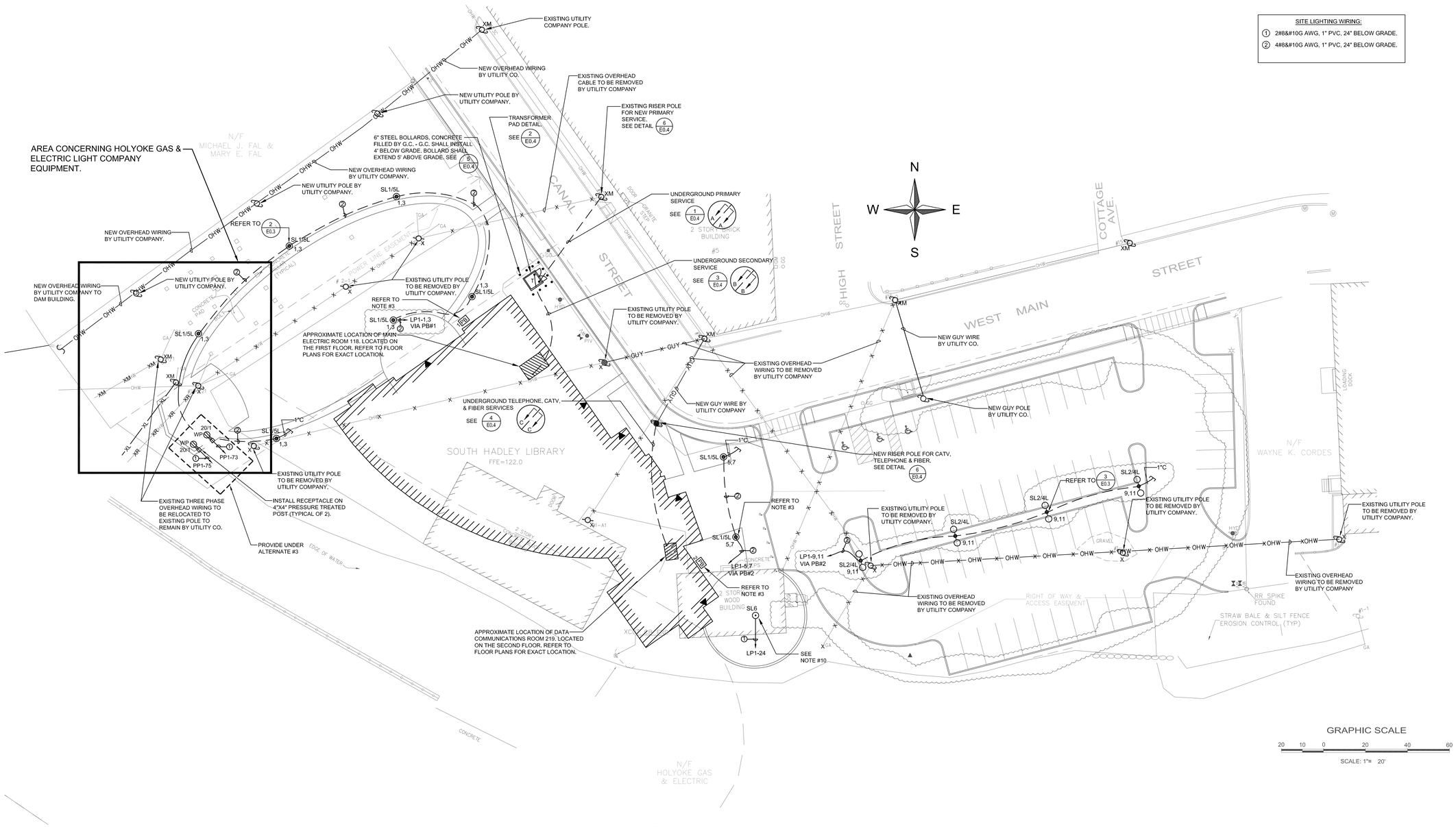

1 / E0.3 ELECTRICAL SITE PLAN

SCALE: 1" = 20'-0"

JOHNSON ROBERTS ASSOCIATES INC.
ARCHITECTS
15 PROPERZI WAY
SOMERVILLE, MA
01243 - 3228

GARCIA-GALUSKA-DESOUSA INC.
CONSULTING ENGINEERS
370 Faunce Corner Road, Dartmouth, MA 02747-1271
508-998-5700 • FAX 508-998-0883 • E-MAIL info@g-g-d.com

Revisions:

SOUTH HADLEY LIBRARY

SOUTH HADLEY, MA

Sheet Title:

ELECTRICAL SITE PLAN

Date: 17-DEC-12 Drawn By: MLP

Scale: AS NOTED Project No.: 1201

E0.3

Bid Documents