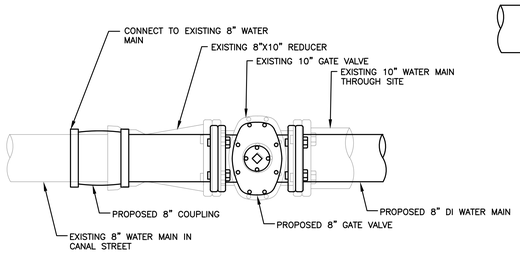

NEW 10" CONNECTION TO EXISTING 8" MAIN IN CANAL STREET

NOT TO SCALE

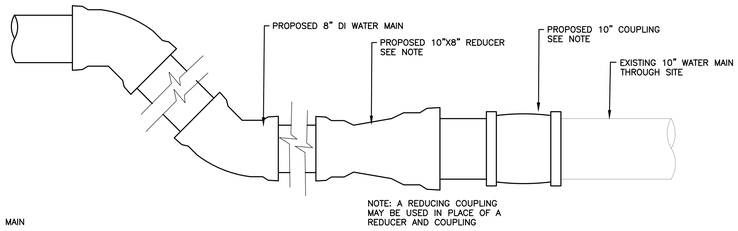

NEW 10" CONNECTION TO EXISTING 10" MAIN AT SOUTEAST CORNER OF SITE

NOT TO SCALE

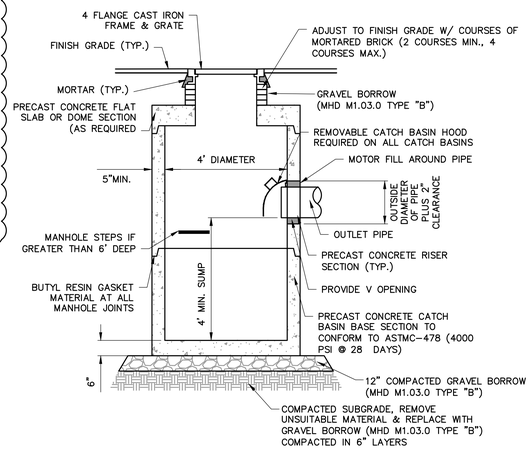

TYPICAL CATCH BASIN DETAIL

NOT TO SCALE

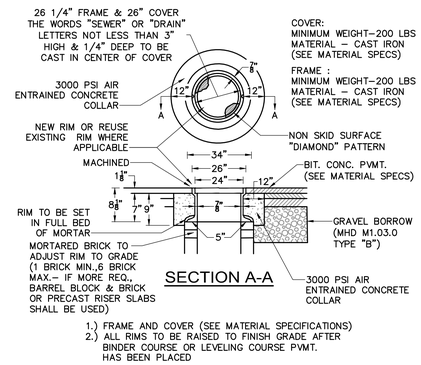

1.) FRAME AND COVER (SEE MATERIAL SPECIFICATIONS)
2.) ALL RIMS TO BE RAISED TO FINISH GRADE AFTER BINDER COURSE OR LEVELING COURSE PVMT. HAS BEEN PLACED

MANHOLE FRAME, COVER & SETTING DETAIL

NOT TO SCALE

NOTE:
* INJECTION MOLDED FITTINGS ARE AVAILABLE IN TEES, WYES, REDUCERS, 45' BENDS AND BELL/BELL COUPLERS.
* WT INJECTION MOLDED FITTINGS AND WT PIPE CAN BE SUBSTITUTED FOR WATER TIGHT APPLICATIONS

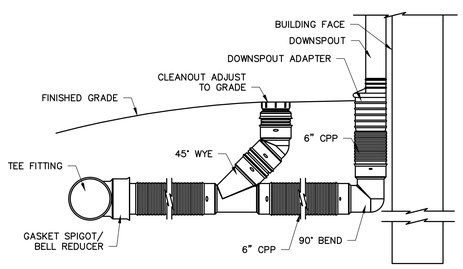

ROOF DRAIN WITH CPP CONNECTION

NOT TO SCALE

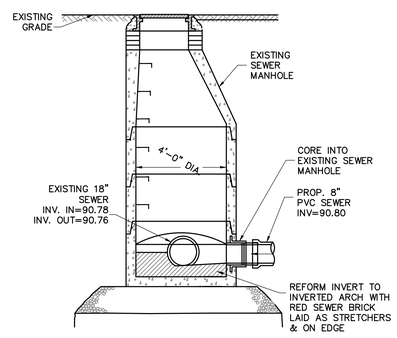

SEWER MANHOLE CONNECTION

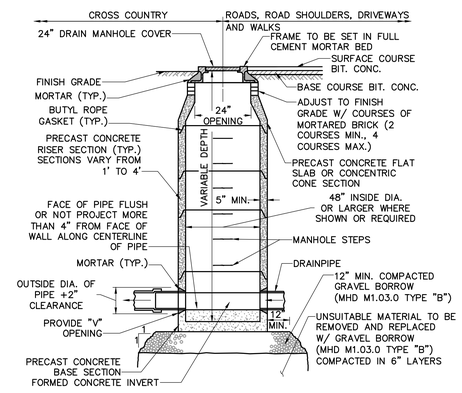

TYPICAL DRAIN MANHOLE DETAIL

NOT TO SCALE

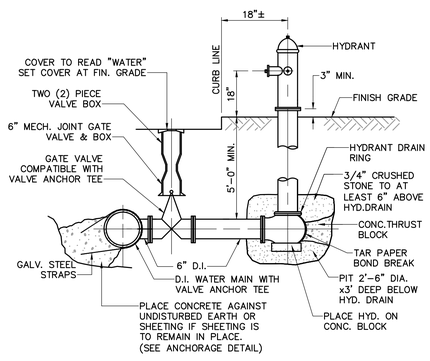

NOTE: ALL JOINTS ON HYDRANT BRANCH TO BE RESTRAINED JOINTS

FIRE HYDRANT DETAIL

NOT TO SCALE

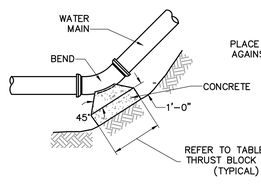

PLAN

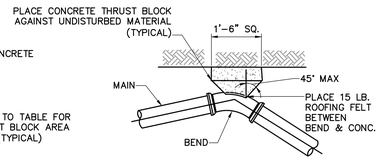

PLAN

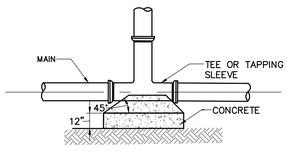

PLAN

NOTES:

1. THRUST BLOCKS TO BE USED ON ALL PRESSURE PIPES AT HORIZONTAL AND VERTICAL BENDS GREATER OR EQUAL TO 45°, TEES AND DEAD ENDS.
2. FOR FITTINGS WITH LESS THAN 45° DEFLECTION USE BEARING AREAS FOR 45° BEND.
3. BEARING AREAS BASED ON HORIZONTAL PASSIVE SOIL PRESSURE OF 2000 PSF AND A MINIMUM INTERNAL WATER PRESSURE OF 175 PSIG. JOINTS SHALL NOT BE ENCASED IN CONCRETE, BEARING AREAS MAY BE DISREGARDED FOR TRENCHES IN ROCK WHERE THE TOP OF THE ROCK FACE IS AT OR ABOVE THE CROWN OF THE PIPE. HOWEVER, CONCRETE BACKING SHALL BE PLACED BETWEEN THE PIPE AND ROCK FACE.

TABLE OF BEARING AREAS IN SQUARE FEET AGAINST UNDISTURBED MATERIAL FOR FITTING. *

SIZE OF MAIN (INCHES)	90° BEND (S.F.)	45° BEND (S.F.)	DEAD END (S.F.)
4	2.3	1.3	1.6
6	4.7	2.5	3.3
8	8.0	4.5	6.0
12	17.0	9.5	12.0

THRUST BLOCK DETAILS

NOT TO SCALE

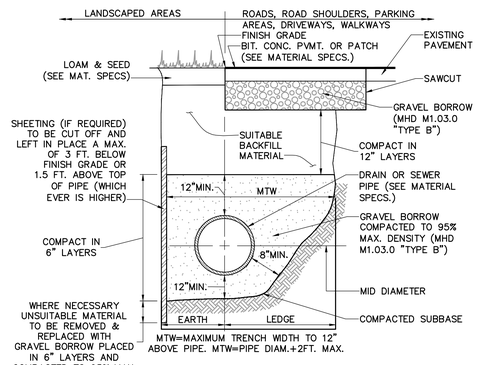

STANDARD TRENCH DETAIL FOR UTILITY PIPE

NOT TO SCALE

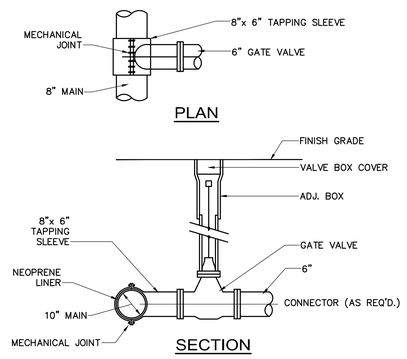

PLAN

SECTION

TAPPING SLEEVE, VALVE & BOX DETAIL

NOT TO SCALE

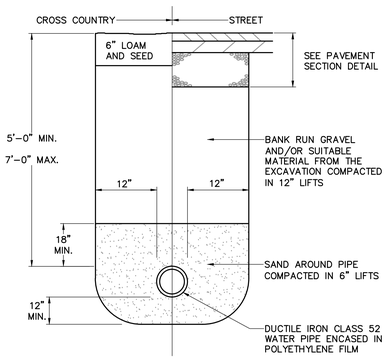

WATER TRENCH DETAIL

NOT TO SCALE

Nitsch Engineering

www.nitscheng.com
2 Center Plaza, Suite 430
Boston, MA 02108
T: (617) 338-0063
F: (617) 338-6472

- Civil Engineering
- Land Surveying
- Transportation Engineering
- Sustainable Site Consulting
- Planning
- GIS

JOHNSON ROBERTS ASSOCIATES INC.
ARCHITECTS

15 PROPERZI WAY
SOMERVILLE, MA
01243 - 3228

Revisions:

REVISED PERMIT SET - 2/15/2013

SOUTH HADLEY LIBRARY

SOUTH HADLEY, MA

Sheet Title:

DETAILS

Date: 21-NOV-12 Drawn By: TJM

Scale: As Shown Project No..: 9165

C-7