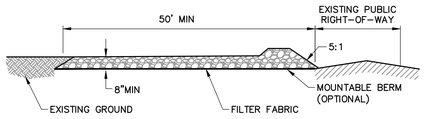

SIDE ELEVATION

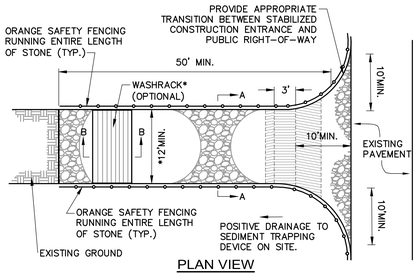

PLAN VIEW

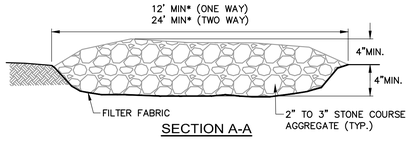

SECTION A-A

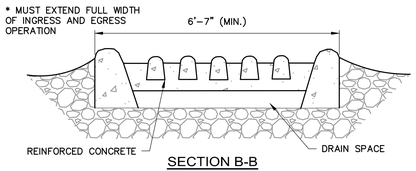

SECTION B-B

CONSTRUCTION SPECIFICATIONS

1. STONE SIZE – USE 2"TO 3" STONE.
2. LENGTH – GREATER THAN OR EQUAL TO 50 FEET
3. THICKNESS – 6"
4. WIDTH – TWELVE FOOT MINIMUM (ONE WAY), TWENTY FOUR FOOT MINIMUM (TWO WAY), BUT NOT LESS THAN THE FULL WIDTH AT POINTS WHERE INGRESS OR EGRESS OCCURS.
5. SURFACE WATER – ALL SURFACE WATER FLOWING OR DIVERTED TOWARD CONSTRUCTION ENTRANCES SHALL BE PIPED ACROSS THE ENTRANCE. IF PIPING IS IMPRACTICAL, A MOUNTABLE BERM SHALL BE PERMITTED.
6. MAINTENANCE – THE ENTRANCE SHALL BE MAINTAINED IN A CONDITION WHICH SHALL PREVENT TRACKING OR FLOWING OF SEDIMENT ONTO PUBLIC RIGHTS–OF–WAY. THIS MAY REQUIRE PERIODIC TOP DRESSING WITH ADDITIONAL STONE AS CONDITIONS DEMAND AND REPAIR OR CLEANOUT OF ANY MEASURES USED TO TRAP SEDIMENT. ALL SEDIMENT SPILLED, DROPPED, WASHED OR TRACKED ONTO PUBLIC RIGHTS–OF–WAY MUST BE REMOVED IMMEDIATELY.
7. PERIODIC INSPECTION AND NEEDED MAINTENANCE SHALL BE PROVIDED.
8. ALL ENTRANCES SHALL BE PROTECTED WITH A STABILIZED CONSTRUCTION ENTRANCE.

STABILIZED CONSTRUCTION ENTRANCE

NOT TO SCALE

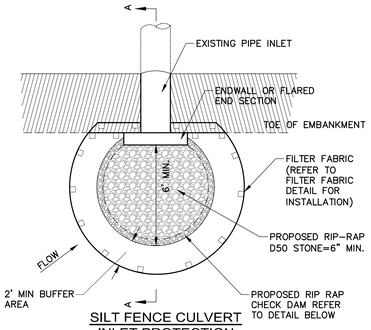

SILT FENCE CULVERT INLET PROTECTION

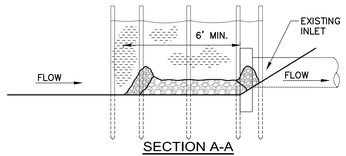

SECTION A-A

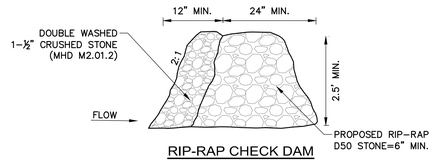

RIP-RAP CHECK DAM

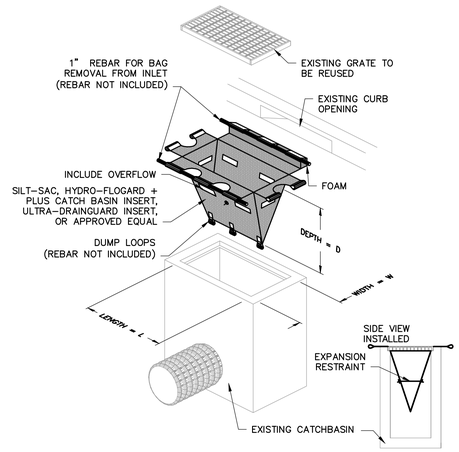

THIS METHOD OF INLET PROTECTION IS APPLICABLE WHERE THE INLET DRAINS SHEET, OVERLAND OR CONCENTRATED FLOWS (NOT GREATER THAN 1 CFS). THE METHOD CAN DRAIN FLAT AREA TO STEEP SLOPES. INLET CAPACITY WILL BE DECREASED WITH THIS METHOD AND THE CONTRACTOR SHALL EXPECT PONDING DURING HIGH FLOW EVENTS.

INLET PROTECTION
CATCH BASIN W/ SILTATION SACK

NOT TO SCALE

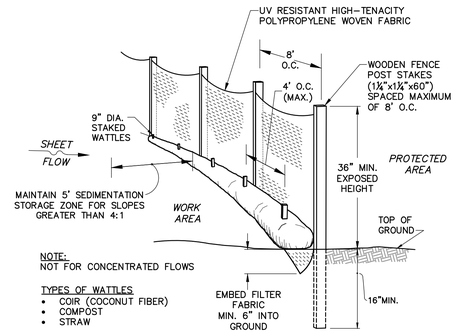

PERSPECTIVE VIEW

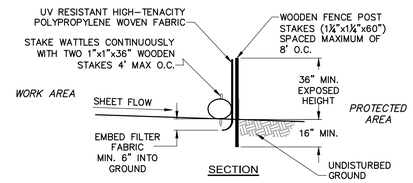

EROSION CONTROL BARRIER - OPTION 1
SILT FENCE DETAIL WITH WATTLES

NOT TO SCALE

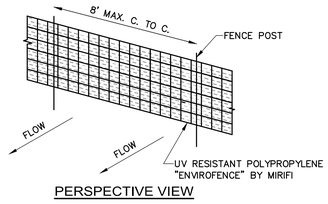

PERSPECTIVE VIEW

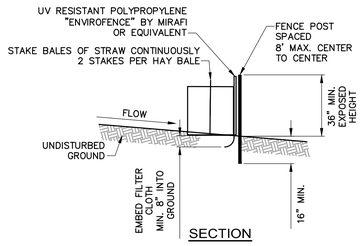

EROSION CONTROL BARRIER - OPTION 2
SILT FENCE DETAIL WITH STRAW BALE

NOT TO SCALE

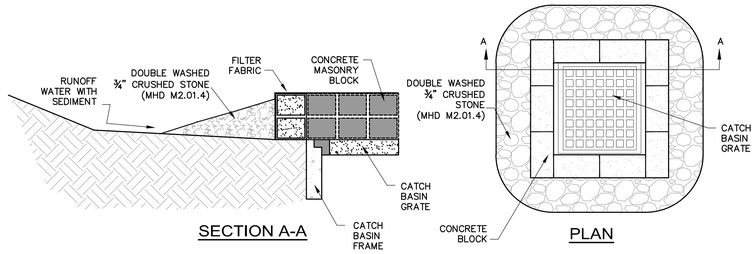

THIS METHOD OF INLET PROTECTION IS APPLICABLE WHERE HEAVY FLOWS ARE EXPECTED AND WHERE AN OVERFLOW CAPACITY IS NECESSARY TO PREVENT EXCESSIVE PONDING AROUND STRUCTURE.

INLET PROTECTION
CATCH BASIN W/ BLOCK AND GRAVEL

NOT TO SCALE

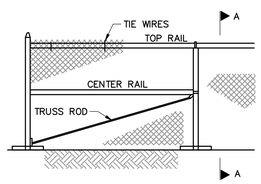

ELEVATION

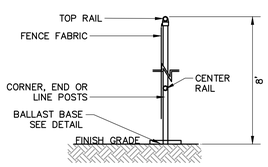

SECTION A-A

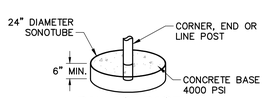

BALLAST BASE

NOTES

1. END, GATE AND CORNER POSTS SHALL BE BRACED TO ADJACENT LINE POSTS. (MORE THAN 30° CHANGE IN DIRECTION CONSTITUTES A CORNER)
2. FABRIC SHALL BE 0.148" GAUGE MIN. WIRE, WOVEN INTO APPROXIMATELY 2" DIAMOND MESH.
3. ZINC–COATED STEEL FABRIC BASE METAL SHALL BE COATED WITH PRIME WESTERN SPELTER OR EQUAL.
4. ALUMINUM COATED STEEL FABRIC BASE METAL SHALL BE COATED WITH ALUMINUM ALLOY.
5. LINE POSTS SHALL BE 2½" O.D. END OR CORNER POSTS SHALL BE 3" O.D.
6. THE CONTRACTOR IS RESPONSIBLE FOR SURFACE RESTORATION ONCE THE FENCE IS REMOVED.
7. THE CONTRACTOR SHALL REMOVE AND DISPOSE OF THE TEMPORARY CONSTRUCTION FENCE AT THE CONCLUSION OF THE PROJECT.
8. SEE SPECIFICATION

TEMPORARY CONSTRUCTION
CHAIN LINK FENCE WITH BALLAST BASE

NOT TO SCALE

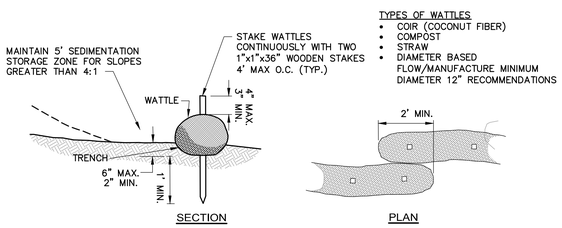

TYPES OF WATTLES
- COIR (COCONUT FIBER)
- COMPOST
- STRAW
- DIAMETER BASED FLOW/MANUFACTURE MINIMUM DIAMETER 12" RECOMMENDATIONS

WATTLES - SLOPE PROTECTION FOR SLOPES LESS THAN 10:1

NOT TO SCALE

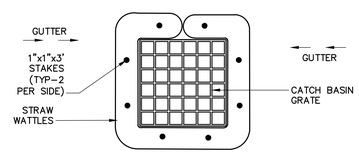

THIS METHOD OF INLET PROTECTION IS APPLICABLE WHERE THE INLET DRAINS A RELATIVELY FLAT AREA (SLOPE NO GREATER THAT 5%) WHERE THE INLET INLET SHEET OR OVERLAND FLOWS (NOT GREATER THAN 1 CFS) ARE TYPICAL. THE METHOD SHALL NOT APPLY TO INLET RECEIVING CONCENTRATED FLOWS. THIS USE OF THIS METHOD SHOULD NOT EXCEED 3 MONTHS WITHOUT REPLACEMENT OF STRAW WATTLES. THIS METHOD NOT ACCEPTABLE IN ACTIVE TRAFFIC AREAS.

CATCH BASIN W/ STRAW WATTLES
INLET PROTECTION

NOT TO SCALE

Nitsch Engineering

www.nitscheng.com
2 Center Plaza, Suite 430
Boston, MA 02108
T: (617) 338-0063
F: (617) 338-6472

- Civil Engineering
- Land Surveying
- Transportation Engineering
- Sustainable Site Consulting
- Planning
- GIS

JOHNSON ROBERTS ASSOCIATES INC.
ARCHITECTS

15 PROPERZI WAY
SOMERVILLE, MA
01243 - 3228

Revisions:

REVISED PERMIT SET - 2/15/2013

SOUTH HADLEY LIBRARY

SOUTH HADLEY, MA

Sheet Title:

SWPPP DETAILS

Date: 21-NOV-12 Drawn By: TJM

Scale: As Shown Project No..: 9165

C-6