GGD TYPE: SL1-4L, SL2-4L, SL3

POWERED BY LifeLED™

South Hadley Library
February 15, 2015

DOS-DBA DOS-DBB DOS-DBF DOS-LR-DBC DOS-LD-YM

DOMUS SMALL
SERIES

Beauty through equilibrium / The Domus Series of products – Domus, Domus 55, and Domus Small – are all designed to complement each other and bring balance to any environment. Their charm is undeniable. Simplicity, refinement, and elegance, all fuse together to create harmonious beauty through designed equilibrium. »

UNBEATABLE CHARM

Domus Small is the perfect complement to the rest of the Domus family. For example, you could install the Domus in a parking lot, and the Domus Small along the paths leading from the parking lot to the building, creating a subtly refined design that balances shape, dimension and proportion. The Domus Small belongs to a generation of luminaires designed to respect environmental values. By mastering the use of material and photometry, we have created... a true classic.

BALANCED DESIGN

Highlights architectural details and brings harmony to the architectural environment. The Domus Small Series inspires with its singular appeal and flair, and opens up new possibilities for creative lighting expression thanks to its balanced design. Easy to maintain with toolfree access, respectful of the environment with high-performance full cut-off optics, extremely durable thanks to cast aluminum components, the pedestrian scale Domus Small is the perfect example of balanced technology and design. »

BENEFITS

- Respectful of the environment by offering full cut-off optics.
- Clear glass tempered flat lens on a hinged frame.
- Smartseal™ optical system guarantees IP66 watertightness.
- Removable ballast tray unity with quick disconnect.
- Available with metal halide (MH), high pressure sodium (HPS) and compact fluorescent lamp (CF).

Philips Lumec reserves the right to substitute materials or change the manufacturing process of its products without prior notification.
*For the latest updates go to **www.lumec.com***

DOS-DBA

DOMUS SMALL SERIES

LUMINAIRES

*Conform to the **UL 1598** and **CSA C22.2 No. 250.0-08** standards*

DOS

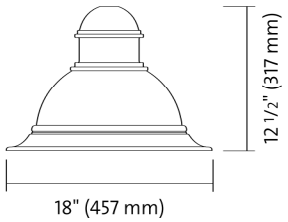

DOS-DBA

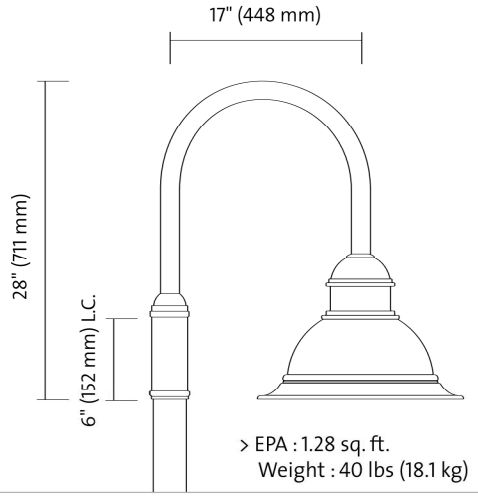

> EPA : 1.28 sq. ft.
Weight : 40 lbs (18.1 kg)

DOS-DBA-2

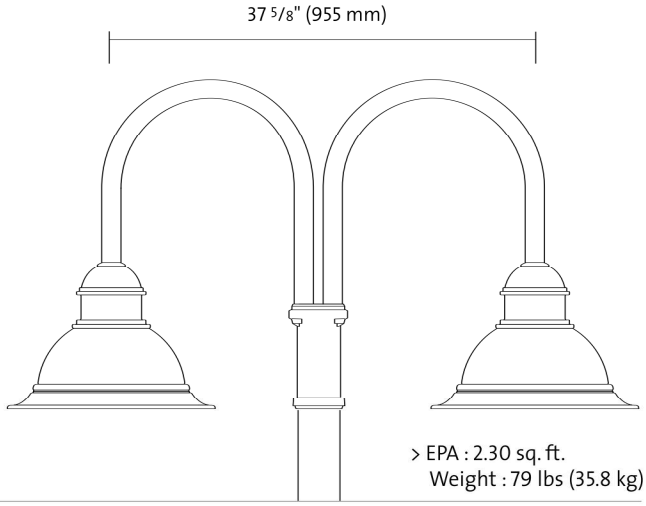

> EPA : 2.30 sq. ft.
Weight : 79 lbs (35.8 kg)

DOS-DBA-M / mounting details

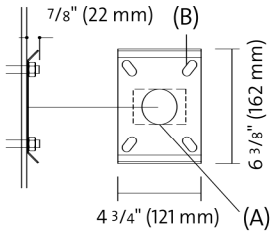

(A) One 2" hole (51 mm) Ø for wiring
(B) 4 oblong holes 1/2" x 1" (13 mm x 25 mm) for anchoring
Horizontal junction box of 2" x 3" (51 x 76 mm) and
4 anchor bolts of 3/8" Ø (9.5 mm) not included

> *Structural members must be present in wall to accept bolts*

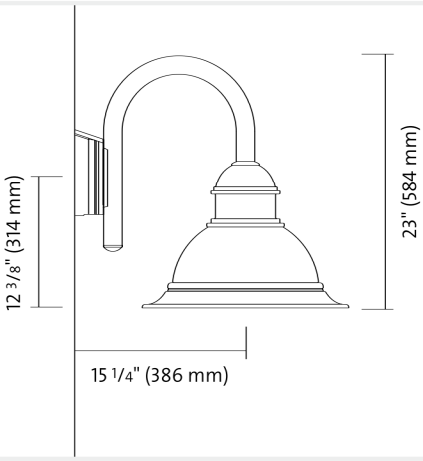

Philips Lumec reserves the right to substitute materials or change the manufacturing process of its products without prior notification.
*For the latest updates go to **www.lumec.com***

PHILIPS LUMEC

SPECIFICATIONS

Housing
In a round shape, this housing is made of die cast A380 aluminum, c/w a watertight grommet, mechanically assembled to the bracket with four bolts 5/16 18 UNC. This suspension system permits for a full rotation of the luminaire in 90 degree increments.

Ballast
High power factor of 90%. Lamp starting capacity -40°F (-40°C) degrees. Assembled on a unitized removable tray with quick disconnect plug.

Arm
Features one or two 1.66» (42 mm) round aluminum tubes welded to a cast pole adaptor (or wall mounting box) and one or two cast suspension rings. (Slip-fits over 3» OD pole by 6»)

Finish
"Hot dip" chemical etching preperation. Lumital™ polyester powder coat finish. Excellent color retention as per #ASTM D2244, and outstanding salt-spray resistance according to #ASTM B117 testing procedures.

ORDERING INFORMATION

PRODUCT	LAMP	OPTICAL SYSTEM	VOLTAGE	LUMINAIRE OPTIONS	MOUNTING	CONFIGURATION	FINISH[1]
DOS	50MH	SG2	120	LR[2]		YM[3]	BE2/TX
	70MH	SG3	208	LD[3]			BE6/TX
	100MH	SG4	240	SLG[3]	DBA	1A	BE8/TX
	150MH[2]	SGQ	277	MAS	DBF	2	BK/TX
	35HPS		347	HS[3]	DBB	M	BR/TX
	50HPS		MT		DBC		GN/TX
	70HPS						GN4/TX
	100HPS						GN6/TX
	150HPS[2]						GN8/TX
	18 CF	CF5	120				GY3/TX
	26 CF		208				RD2/TX
	32 CF		240				RD4/TX
	42 CF		277				WH/TX
			347				NP
	40W30LED	LE2F	120				TG
	60W30LED	LE3F	208				TS
		LE4F	240				
		LE5F	277				

[1] *Consult Philips Lumec's color chart.*
[2] *Remote ballast.*
[3] *Not available with LED.*

LR: Luminous ring.
LD: Luminous dome.
SLG: Glass sag lens.
MAS: Mounting adaptor for an existing mounting supplied by other for a 1 1/4 NPT nipple.
HS: House shield.

> *Medium base socket / ED17 lamp for HID (lamp not included).*
> *Socket: GX24Q-2 (18W), GX24Q-3 (26W)(32W), GX24Q-4 (42W), triple tube for compact fluorescent (lamp not included).*

See details on line of poles available towards the end of document.

ORDERING SAMPLE

PRODUCT	LAMP	OPTICAL SYSTEM	VOLTAGE	LUMINAIRE OPTIONS	MOUNTING	CONFIGURATION	FINISH
DOS	100MH	SG3	120	HS	DBA	1A	BE2TX

Philips Lumec reserves the right to substitute materials or change the manufacturing process of its products without prior notification.
*For the latest updates go to **www.lumec.com***

PHILIPS LUMEC

ASSEMBLY EXAMPLES

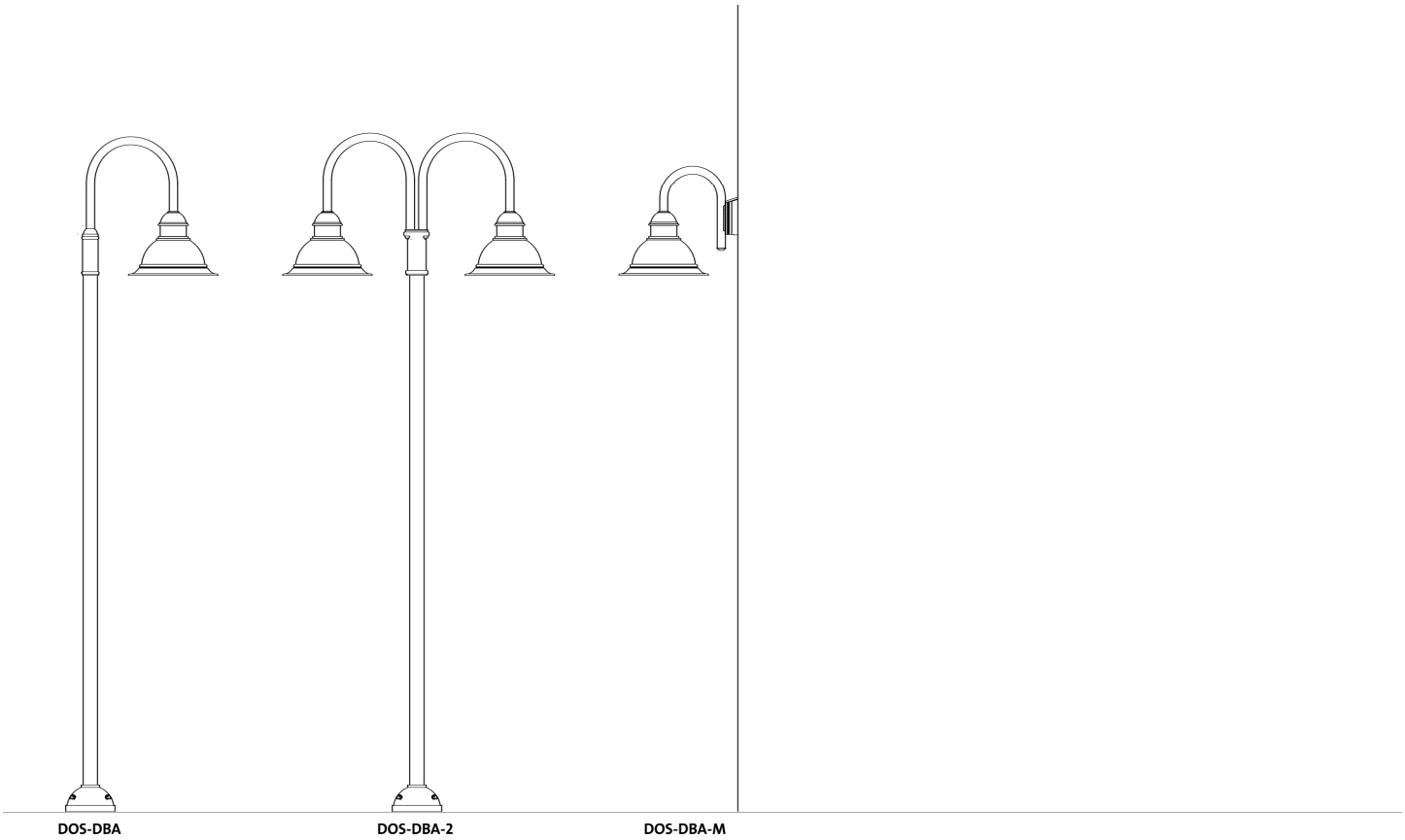

Philips Lumec reserves the right to substitute materials or change the manufacturing process of its products without prior notification.
For the latest updates go to ***www.lumec.com***