Mount Holyoke College

Community Center with Dining

50 College Street
South Hadley, MA 01075

15048.00
Architect's Project Number

PROJECT DIRECTORY

Owner
Mount Holyoke College
50 College Street
South Hadley, MA 01075

Contact: Shannon Gurek
T: 413.538.2000
E: sgurek@mtholyoke.edu

Structural Engineer
LA Feuss Partners
101 Federal Street, Suite 502
Boston, MA 02110

Contact: Amir Mesgar, PE
T: 617.948.5700
F: 617.948.5710
E: amesgar@lafp.com

Owner's Project Manager
CSL Consulting
30 North Avenue
Burlington, MA 01803

Contact: Enzo Scalora
T: 781.222.5120
F: 617.812.8520
E: escalora@csl-consulting.com

Lighting Designer
Sladen Feinstein Integrated Lighting
295 Huntington Avenue, Suite 305
Boston, MA 02115

Contact: Josh Feinstein, LC
T: 617.267.9500
F: 617.267.9590
E: josh@sladenfeinstein.com

Architect
Bergmeyer Associates, Inc.
51 Sleeper Street
Boston, MA 02210

Contact: Matthew Hyatt, AIA, LEED AP
T: 617.542.1025
F: 617.542.1026
E: mhyatt@bergmeyer.com

Civil Engineer
Green International Affiliates, Inc.
239 Littleton Road, Suite 3
Westford, MA 01886

Contact: Shahin Shain, PE
T: 978.923.0400
F: 978.923.0404
E: sshahin@greenintl.com

Food Service Consultant
Ricca Design Studios
5325 S Valentia Way
Greenwood Village, CO 80111

Contact: Leonard Condenzio, FCSI
T: 781.659.7377
F: 781.659.7378
E: lcondenzio@ricca.com

Landscape Architect
Ground Inc.
6 Carlton Street
Somerville, MA 02143

Contact: Shauna Gillies-Smith
T: 617.718.0889
E: sgs@groundinc.com

Consulting Engineer / Code Consultant
Cosentini Associates - A Tetra Tech Company
Building 200, 2nd Floor
One Kendall Square
Cambridge, MA 02139

Contact: Robert Leber, Senior Vice President
T: 617.494.9090
F: 617.494.9292
E: bleber@cosentini-ma.com

Geotechnical Engineer
Welti Associates
227 Williams Street PO Box 397
Glastonbury, CT 06033-0397

Contact: Dr. Clarence Welti, P.E., P.C.
T: 860.633.4623
F: 860.657.2514
E: cwelti@weltiassoc.com

Energy Modeler
The Green Engineer, Inc.
54 Junction Square Drive
Concord, MA 01742

Contact: Neetu Siddarth
T: 978.369.8978
F: 617.267.9590
E: neetu@greenengineer.com

SITE PLAN REVIEW PERMIT SET
FEBRUARY 26, 2016

Bergmeyer
Architecture and Interiors
Bergmeyer Associates, Inc.
51 Sleeper Street
Boston, MA 02210
Phone 617 542 1025
Fax 617 542 1026
www.bergmeyer.com

© Copyright 2016 Bergmeyer Associates, Inc.

SYMBOL LEGEND

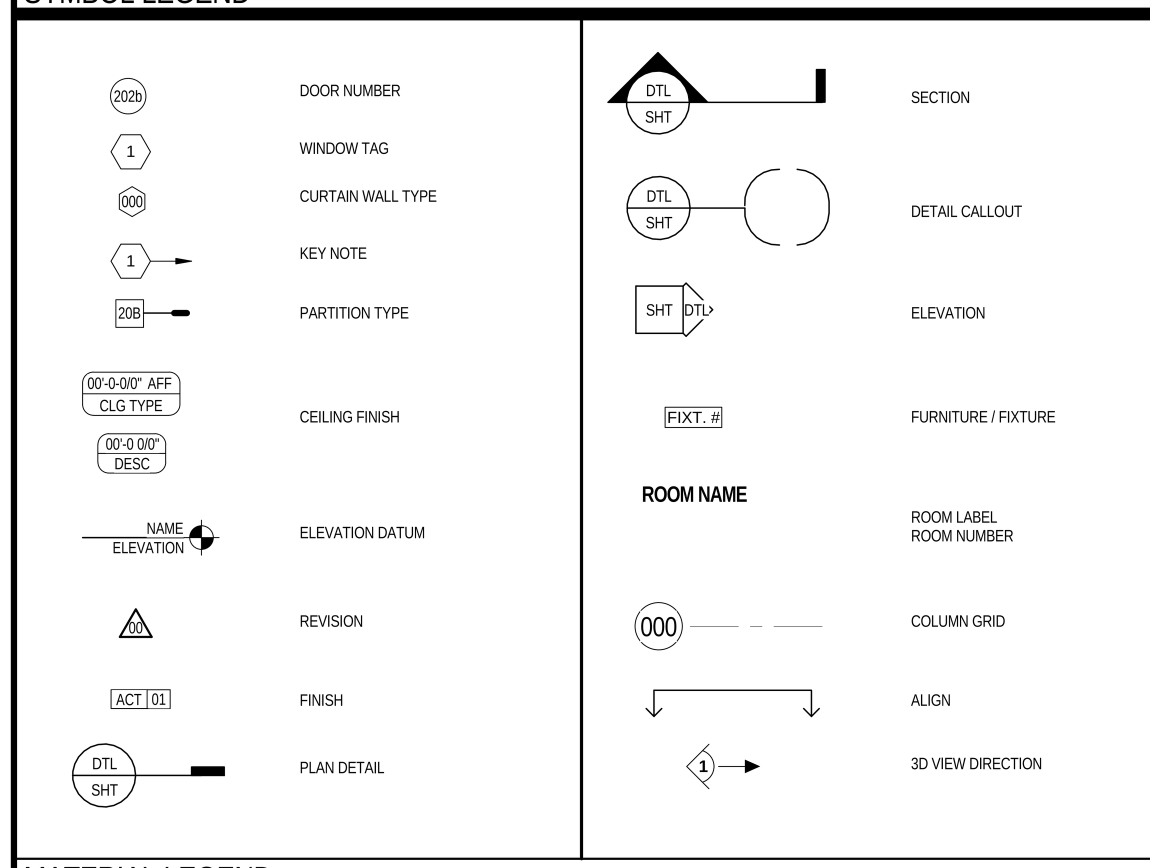

LOCUS PLAN

PROJECT SITE

TRUE NORTH PROJECT NORTH

MATERIAL LEGEND

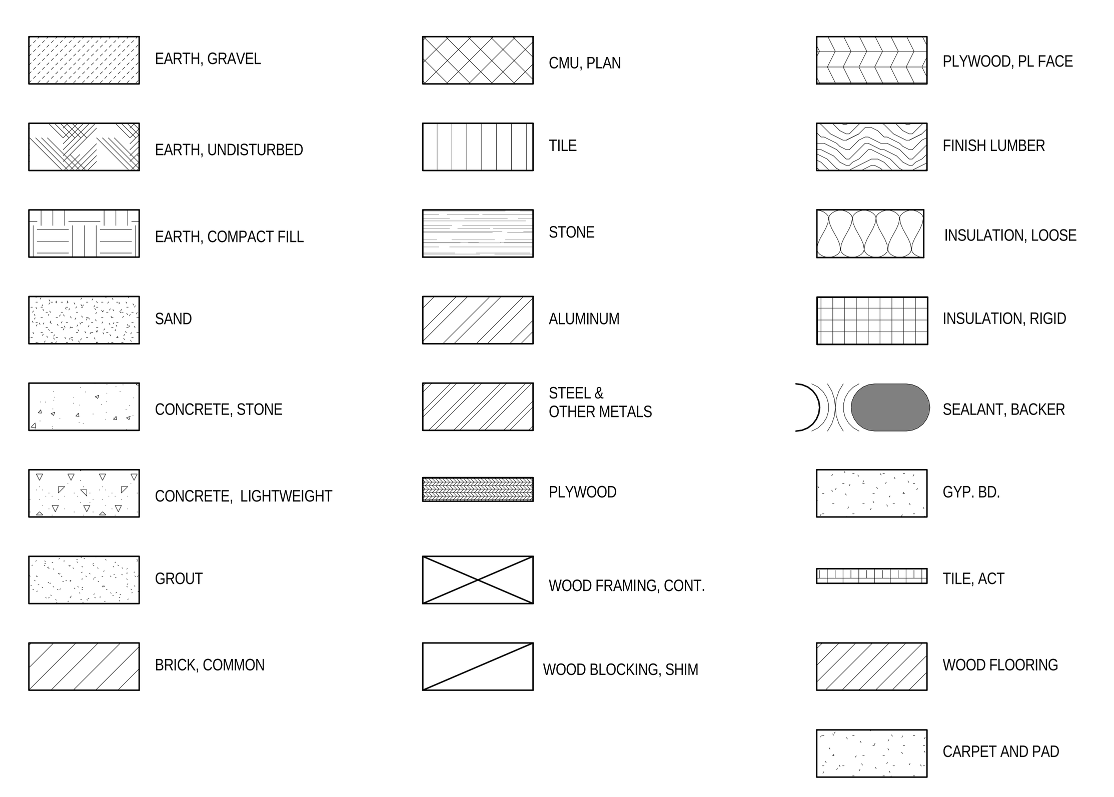

SITE PLAN

TRUE NORTH PROJECT NORTH

ABBREVIATIONS

@	AT
A/C	AIR CONDITIONING
ABVI	ABOVE
ACT	ACOUSTICAL CEILING TILE
ADA	AMERICAN'S W/ DISABILITIES ACT
AFF	ABOVE FINISH FLOOR
ADJ	ADJUSTABLE
AHU	AIR HANDLING UNIT
ALUM/AL	ALUMINUM
APPROX	APPROXIMATE
ARCH	ARCHITECTURAL
AST	ANTISTATIC TILE
AWT	ACOUSTICAL WALL TREATMENT
BBT	BIO-BASED TILE
BD	BOARD
BITUM	BITUMINOUS
BLDG	BUILDING
BLKG	BLOCKING
BM	BEAM
BR	BRICK
BRG	BEARING
CFLG	COUNTER FLASHING
CJ	CONTROL JOINT
CL	CENTER LINE
CLG	CEILING
CLG HGT	CEILING HEIGHT
CLR	CLEAR
CMPST	COMPOSITE
CMU	CONCRETE MASONRY UNIT
CNTR	COUNTER
CO	CASED OPENING
COL	COLUMN
CONC	CONCRETE
CONSTR	CONSTRUCTION
CONT	CONTINUOUS
CPT	CARPET
CSK	COUNTERSUNK
CT	CERAMIC TILE
CTR	CENTER
DEG	DEGREES
DET	DETAIL
DIA	DIAMETER
DIM	DIMENSION
DISP	DISPENSER
DR	DOOR
DR OPNG	DOOR OPENING
DWG	DRAWING
EA	EACH
EIFS	EXTERIOR INSULATION & FINISH SYSTEM
EJ	EXPANSION JOINT
ELEC	ELECTRICAL
EL	ELEVATION
ELEV	ELEVATOR
EMER	EMERGENCY
EQ	EQUAL
EQUIP	EQUIPMENT
ETR	EXISTING TO REMAIN
EWC	ELECTRIC WATER COOLER
EXIST	EXISTING
EXH	EXHAUST
EXP	EXPOSED
EXT	EXTERIOR
FA	FIRE ALARM
FBO	FURNISHED BY OTHERS
FC	FIXTURE CONTRACTOR
FD	FLOOR DRAIN
FE	FIRE EXTINGUISHER
FEC	FIRE EXTINGUISHER CABINET
FF	FINISH FACE
FF EL	FINISH FLOOR ELEVATION
FIN	FINISH
FIXT	FIXTURE
FLR	FLOOR
FLUOR	FLUORESCENT LIGHTING
FDTN	FOUNDATION
FOC	FACE OF CONCRETE
FOF	FACE OF FINISH
FOM	FACE OF MASONRY
FOS	FACE OF STUD
FRT	FIRE RETARDANT TREATED
FT	FOOT (FEET)
FTG	FOOTING
FURG	FURRING
GA	GAGE
GALV	GALVANIZED
GC	GENERAL CONTRACTOR
GFRC	GLASS-FIBER REINFORCED CONCRETE
GFRG	GLASS_FIBER REINFORCED GYPSUM
GL	GLASS or GLAZING
GR	GRADE
GWB	GYPSUM WALLBOARD
GYP	GYPSUM
H/C	HANDICAPPED
HC	HOLLOW CORE
HCWD	HOLLOW CORE WOOD DOOR
HDWD	HARDWOOD
HDWR	HARDWARE
HM	HOLLOW METAL
HMF	HOLLOW METAL FRAME
HORIZ	HORIZONTAL
HP	HIGH POINT OF ROOF/SLOPE
HT	HEIGHT
HVAC	HEATING, VENTILATION & COOLING
HW	HOT WATER
IBGC	INSTALLED BY GENERAL CONTRACTOR
ID	INSIDE DIAMETER
IN	INCH
INCL	INCLUDED
INSUL	INSULATION
INT	INTERIOR
JAN	JANITOR
KPL	KICKPLATE
L	LONG (LENGTH)
L/T	LIGHT TRACK
LAM	LAMINATE
LAV	LAVATORY
LBS	POUNDS
LF	LINEAR FOOT
LH	LEFT-HANDED
LCC	LEAD COATED COPPER
LL	LANDLORD
LP	LOW POINT OF ROOF/SLOPE
MAT	MATERIAL
MAX	MAXIMUM
MAHOG	MAHOGANY
MDO	MEDIUM DENSITY OVERLAY
MECH	MECHANICAL
MEZZ	MEZZANINE
MFR	MANUFACTURER
MIN	MINIMUM
MISC	MISCELLANEOUS
MO	MASONRY OPENING
MSB	MOP SERVICE BASIN
MTD	MOUNTED
MTL	METAL
N	NORTH
NAT	NATURAL
NIC	NOT IN CONTRACT
NL	NIGHT LIGHT
NOM	NOMINAL
NTS	NOT TO SCALE
OA	OVERALL
OC	ON CENTER
OD	OUTSIDE DIAMETER
OF/CI	OWNER FURNISHED/CONTRACTOR INSTALL
OF/OI	OWNER FURNISHED/OWNER INSTALLED
OFI	OWNER FURNISHED & INSTALLED
OPP	OPPOSITE
PLAM	PLASTIC LAMINATE
PLBG	PLUMBING
PLT	PLATE
PLYWD	PLYWOOD
PR	PAIR
P	PAINT
PT	PORCELAIN TILE
PTD	PAINTED
P.T.	PRESSURE TREATED
PTN	PARTITION
QT	QUARRY TILE
R	RISER
RAD	RADIUS
REC	RECESSED
REQD	REQUIRED
REF	REFERENCE
RESIL	RESILIENT
REV	REVISION
RH	RIGHT HAND
RM	ROOM
RO	ROUGH OPENING
RWD	REDWOOD
RWL	RAIN WATER LEADER
SC	SOLID CORE
SD	SMOKE DETECTOR
SECT	SECTION
SF	SQUARE FOOT (FEET)
SHT	SHEET
SIM	SIMILAR
SIPS	STRUCTURAL INSULATED PANEL
SND INS	SOUND INSULATION
SPEC	SPECIFICATION
SQ	SQUARE
SSG	STRATEGIC SOURCING GROUP
SST	STAINLESS STEEL
STD	STANDARD
STL	STEEL
STN	STAIN
STO	STONE TILE
SYS	SYSTEM
T	TREAD
T&G	TONGUE & GROOVE
THK	THICKNESS
THR	THRESHOLD
TOB	TOP OF BEAM
TOC	TOP OF CONCRETE
TOJ	TOP OF JOIST
TOM	TOP OF MASONRY
TOS	TOP OF SLAB
TOS	TOP OF STEEL
TOW	TOP OF WALL
TPD	TOILET PAPER DISPENSER
TPO	THERMOPLASTIC POLYOLEFIN - SINGLE PLY ROOF
TYP	TYPICAL
UC	UNDERCUT
UNO	UNLESS NOTED OTHERWISE
UON	UNLESS OTHERWISE NOTED
VCT	VINYL COMPOSITION TILE
VERT	VERTICAL
VIF	VERIFY IN FIELD
VP	VENEER PLASTER
W/	WITH
W/O	WITHOUT
WA	WALL ANCHOR
WC	WATER CLOSET
WD	WOOD
WF	WIDE FLANGE
WFAB	WALL FABRIC
WH	WATER HEATER
WP	WORKING POINT

MOUNTING HEIGHTS

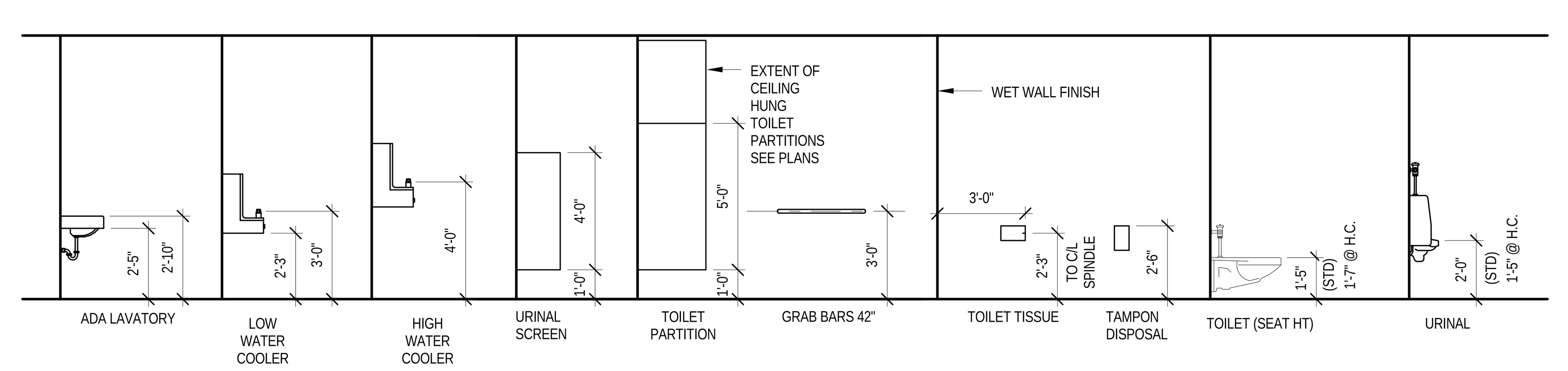

1. ALL DEVICES INSTALLED AS SHOWN U.O.N.
2. ALL MOUNTING HEIGHTS SHALL BE MEASURED FROM CENTERLINE OF DEVICE TO FINISHED FLOOR.
3. DEVICES SHALL BE INSTALLED ON A COMMON VERTICAL CENTERLINE WHEREVER POSSIBLE.

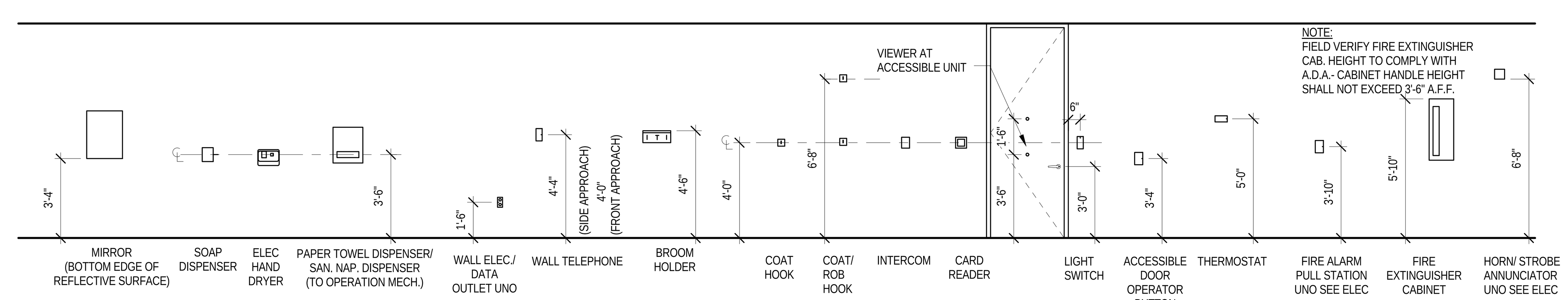

GENERAL NOTES

1. THE GENERAL CONTRACTOR IS RESPONSIBLE FOR MAINTAINING EXISTING AND NEW FIRE RATINGS AT OPENINGS, DISMISSING WALLS, PENETRATIONS, FLOOR SLABS, AND STAIRWAYS.

2. FINISHES ALTERED AT AREAS FOR M.E.P./F.P. SCOPE MODIFICATIONS REQUIRE REPAIR/ REPLACEMENT TO MATCH EXISTING BY GENERAL CONTRACTOR. COORDINATE WITH M.E.P./ F.P. DRAWINGS

3. THE CONTRACTOR IS RESPONSIBLE FOR PATCHING, REPAIRING, AND MAKING SEAMLESS, THE INTERSECTIONS OF NEW AND EXISTING CONSTRUCTION (EX WHERE NEW AND EXISTING PLASTER WALLS INTERSECT).

4. INSTALL FIRE RETARDANT BLOCKING IN WALLS AND CEILINGS WHERE GRAB BARS, CORNICE TRIM, WOOD BASE, COUNTER TOPS, AND MILLWORK SHELVING REQUIRES A RIGID AND SECURE ATTACHMENT TO SAID SURFACE. COORDINATE WITH ELEVATION DRAWINGS.

5. DIMENSIONS:
   A. ALL DIMENSIONS ARE TO BE FINISHED FACE OF WALL, U.O.N.
   B. DRAWINGS ARE NOT TO BE SCALED. VERIFY MISSING OR CONFLICTING DIMENSIONS WITH THE ARCHITECT PRIOR TO CONSTRUCTION.
   C. NOTIFY ARCHITECT OF CONDITIONS WHERE CLEAR OR CRITICAL DIMENSIONS ARE DESIGNATED BUT CANNOT BE MET OR WHERE CORRIDOR / AISLE WIDTH CANNOT MEET THE MINIMUM REQUIREMENTS (3'-8" U.O.N.)

6. NOTIFY ARCHITECT THAT ALL EXISTING WALLS ARE PLUMB. IF NOT, PROVIDE AND INSTALL FURRING AND GWB TO MAKE PLUMB. COORDINATE WITH ARCHITECT PRIOR TO WORK

7. INFILL EXISTING CONCRETE SLAB AS REQ'D WHERE WALLS, FLOOR DRAINS, ETC REMOVED. ARCHITECT TO APPROVE PATCH MATERIAL/TECHNIQUE OF MOCK-UP PRIOR TO COMPLETION OF THE WORK.

8. DETAILS REFEREED TO AS "TYPICAL" SHALL BE CONSIDERED AS A TYPICAL CONDITION REPEATED THROUGH OUT THE PROJECT, WHETHER REFERENCED OR NOT.

9. UNLESS NOTED OTHERWISE ALL DOORS ARE TO BE LOCATED AT 6" FROM INSIDE FACE OF PARTITION TO EDGE OF DOOR JAMB. (HINGE SIDE ONLY)

10. PUBLICLY ACCESSIBLE PORTIONS OF THE BUILDING INCLUDING SIDEWALKS, ENTRY RAMPS, AND EXIT DOORS SHALL COMPLY AT A MINIMUM WIT THE AMERICANS WITH DISABILITIES ACT, TITLE III, AND LOCAL ARCHITECTURAL ACCESSIBILITY REQUIREMENTS.

11. DETAILS REFEREED TO AS "TYPICAL" SHALL BE CONSIDERED AS A TYPICAL CONDITION REPEATED THROUGH OUT THE PROJECT, WHETHER REFERENCED OR NOT.

12. GENERAL CONTRACTOR SHALL PROVIDE A FULL SET OF CONSTRUCTION DOCUMENTS TO ALL SUB-CONTRACTORS. ALL CROSS-REFERENCING SHALL BE THE SOLE RESPONSIBILITY OF THE GENERAL CONTRACTOR.

13. ALL EXTERIOR WOOD BLOCKING SHALL BE PRESSURE TREATED.

14. THE GENERAL CONTRACTOR SHALL MAINTAIN AN ACCEPTED SET OF SHOP DRAWINGS IN THE FIELD/SITE AT ALL TIMES DURING INSTALLATION AND CONSTRUCTION.

15. THE GENERAL CONTRACTOR IS RESPONSIBLE FOR ALL WORK INDICATED IN THE SET OF CONSTRUCTION DRAWINGS AND SPECIFICATIONS.

16. ALL CELL EQUIPMENT TO BE RELOCATED DURING ROOF CONSTRUCTION. G.C. TO COORDINATE.

DRAWING LIST

NUMBER	SHEET NAME	SD 08/07/2015	30% DD 01/22/2016
G000	COVER SHEET	X	X
G001	GENERAL NOTES	X	X
~~G002~~	~~KEY PLAN~~	X	X
L1.01	LAYOUT PLAN	X	X
L1.02	MATERIAL PLAN	X	X
L1.03	GRADING PLAN		X
~~L1.04~~	~~PLANTING PLAN~~		X
~~L3.01~~	~~DETAILS~~	X	X
~~L3.02~~	~~DETAILS~~	X	X
~~L3.03~~	~~STAIR DETAILS~~		X
~~L3.04~~	~~STONE SEAT WALL DETAILS~~		X
~~L3.05~~	~~STONE SEAT WALL DETAILS~~		X
~~L3.09~~	~~PLANTING DETAILS~~		X
C101	EXISTING CONDITIONS TOPOGRAPHIC PLAN		X
C102	EXISTING CONDITIONS SITE UTILITY PLAN		X
C103	SITE EROSION & SEDIMENTATION CONTROL PLAN		X
C104	SITE UTILITY DEMO & RELOCATION PLAN		X
C105	SITE UTILITY PLAN		X
C106	LOADING DOCK GRADING PLAN		X
C107	SITE DETAILS I		X
C108	SITE DETAILS II		X
C109	SITE DETAILS III		X
C110	SITE DETAILS IV		X
FD101	FIRE DEPARTMENT ACCESS PLAN		
~~S000.2~~	~~AXONOMETRIC VIEWS~~		X
~~S100~~	~~KEY PLAN~~		X
~~S101.1~~	~~LOWER LEVEL - BLANCHARD WEST FRAMING PLAN~~		X
~~S101.2~~	~~LOWER LEVEL - BLANCHARD EAST FRAMING PLAN~~		X
~~S101.3~~	~~LOWER LEVEL - DINING FOUNDATION PLAN~~		X
~~S102.1~~	~~MIDDLE LEVEL - BLANCHARD WEST FRAMING PLAN~~		X
~~S102.2~~	~~MIDDLE LEVEL - BLANCHARD EAST FRAMING PLAN~~		X
~~S102.3~~	~~MIDDLE LEVEL - DINING ROOF FRAMING PLAN~~		X
~~S103.3~~	~~UPPER LEVEL - DINING HIGH ROOF FRAMING PLAN~~		X
~~S105~~	~~VERTICAL BRACE ELEVATIONS~~		X
~~AD101.1~~	~~LOWER LEVEL DEMOLITION PLAN - BLANCHARD~~	X	X
~~AD101.2~~	~~LOWER LEVEL DEMOLITION PLAN - DINING NORTH~~	X	X
~~AD102.1~~	~~MIDDLE LEVEL DEMOLITION PLAN - BLANCHARD~~	X	X
~~AD103.1~~	~~UPPER LEVEL DEMOLITION PLAN - BLANCHARD~~	X	X
~~AD111.1~~	~~LOWER LEVEL DEMOLITION REFLECTED CEILING PLAN~~	X	X
~~AD112.1~~	~~MIDDLE LEVEL DEMOLITION REFLECTED CEILING PLAN~~	X	X
~~AD113.1~~	~~UPPER LEVEL DEMOLITION REFLECTED CEILING PLAN~~	X	X
A100	ARCHITECTURAL SITE PLAN		
~~A101.1~~	~~LOWER LEVEL FLOOR PLAN - BLANCHARD~~	X	X
~~A101.2~~	~~LOWER LEVEL FLOOR PLAN - DINING NORTH~~	X	X
~~A101.3~~	~~LOWER LEVEL FLOOR PLAN - DINING SOUTH~~	X	X
~~A102.1~~	~~MIDDLE LEVEL FLOOR PLAN - BLANCHARD~~	X	X
~~A102.2~~	~~MIDDLE LEVEL FLOOR PLAN - DINING NORTH~~		X
~~A103.1~~	~~UPPER LEVEL FLOOR PLAN - BLANCHARD~~	X	X
~~A103.2~~	~~ROOF PLAN - DINING NORTH~~	X	X
~~A103.3~~	~~ROOF PLAN - DINING SOUTH~~	X	X
~~A111.1~~	~~LOWER LEVEL REFLECTED CEILING PLAN - BLANCHARD~~	X	X
~~A111.2~~	~~LOWER LEVEL REFLECTED CEILING PLAN - DINING NORTH~~	X	X
~~A111.3~~	~~LOWER LEVEL REFLECTED CEILING PLAN - DINING SOUTH~~	X	X
~~A112.1~~	~~MIDDLE LEVEL REFLECTED CEILING PLAN - BLANCHARD~~	X	X
~~A112.2~~	~~MIDDLE LEVEL REFLECTED CEILING PLAN - DINING NORTH~~	X	X
~~A113.1~~	~~UPPER LEVEL REFLECTED CEILING PLAN - BLANCHARD~~	X	X
~~A131.1~~	~~LOWER LEVEL FURNITURE/ FIXTURE PLAN - BLANCHARD~~	X	X
~~A131.2~~	~~LOWER LEVEL FURNITURE/ FIXTURE PLAN - DINING NORTH~~	X	X
~~A131.3~~	~~LOWER LEVEL FURNITURE/ FIXTURE PLAN - DINING SOUTH~~	X	X
~~A132.1~~	~~MIDDLE LEVEL FURNITURE/ FIXTURE PLAN - BLANCHARD~~	X	X
~~A133.1~~	~~UPPER LEVEL FUTNITURE/ FIXTURE PLAN~~	X	X
A201	EXTERIOR ELEVATIONS - DINING	X	X
A202	EXTERIOR ELEVATIONS - DINING	X	X
~~A220~~	~~LOWER LEVEL INTERIOR VIEWS - BLANCHARD~~	X	X
~~A221~~	~~MIDDLE LEVEL INTERIOR VIEWS - BLANCHARD~~	X	X
~~A222~~	~~UPPER LEVEL INTERIOR VIEWS - BLANCHARD~~	X	X
~~A223~~	~~INTERIOR VIEWS - DINING~~	X	X
~~A224~~	~~INTERIOR VIEWS - DINING~~	X	X
~~A225~~	~~INTERIOR VIEWS - DINING~~		X
~~A301~~	~~PARTIAL BUILDING SECTIONS - DINING~~	X	X
~~A302~~	~~PARTIAL BUILDING SECTIONS - DINING~~	X	X
~~A310~~	~~WALL SECTIONS~~		X
~~A311~~	~~WALL SECTIONS~~		X
~~A312~~	~~WALL SECTIONS~~		X
~~A320~~	~~EXTERIOR DETAILS~~		X
~~A330~~	~~ROOF DETAILS~~		X
~~A601~~	~~PARTITION TYPES~~		X
~~QF000~~	~~FOODSERVICE INDEX~~	X	X
~~QF100~~	~~KEY PLAN~~	X	X
~~QF100A~~	~~KEY PLAN~~	X	X
~~QF100B~~	~~GENERATOR KEY PLAN~~		X
~~QF400~~	~~EQUIPMENT PLAN~~	X	X
~~QF401~~	~~UTILITY SCHEDULE~~		X
~~QF405~~	~~EQUIPMENT PLAN~~	X	X
~~QF406~~	~~UTILITY SCHEDULE~~		X
~~QF410~~	~~EQUIPMENT PLAN~~	X	X
~~QF411~~	~~UTILITY SCHEDULE~~		X
~~QF415~~	~~EQUIPMENT PLAN~~	X	X
~~QF416~~	~~UTILITY SCHEDULE~~		X
~~QF416A~~	~~UTILITY SCHEDULE~~		X
~~QF420~~	~~EQUIPMENT PLAN~~	X	X
~~QF420A~~	~~UTILITY SCHEDULE~~		X
~~QF421~~	~~UTILITY SCHEDULE~~		X
~~QF422A~~	~~UTILITY SCHEDULE~~		X
~~QF425~~	~~EQUIPMENT PLAN~~	X	X
~~QF426~~	~~UTILITY SCHEDULE~~		X
~~QF430~~	~~EQUIPMENT PLAN~~	X	X
~~QF431~~	~~UTILITY SCHEDULE~~		X
~~QF431A~~	~~UTILITY SCHEDULE~~		X
~~QF503~~	~~STANDARD DETAILS~~		X
~~QF504~~	~~STANDARD DETAILS~~		X
~~QF505~~	~~STANDARD DETAILS~~		X
~~QF600~~	~~REFRIGERATION DETAILS~~		X
~~QF601~~	~~REFRIGERATION DETAILS~~		X
~~QF602~~	~~REFRIGERATION DETAILS~~		X
~~QF603~~	~~REFRIGERATION DETAILS~~		X
~~QF700~~	~~HOOD DETAILS~~		X
~~QF701~~	~~HOOD DETAILS~~		X
~~QF702~~	~~HOOD DETAILS~~		X
~~QF703~~	~~HOOD DETAILS~~		X
~~QF704~~	~~HOOD DETAILS~~		X
~~QF705~~	~~HOOD DETAILS~~		X
~~QF706~~	~~HOOD DETAILS~~		X
~~QF707~~	~~HOOD DETAILS~~		X
~~QF708~~	~~HOOD DETAILS~~		X
~~QF709~~	~~HOOD DETAILS~~		X
~~QF710~~	~~HOOD DETAILS~~		X
~~QF711~~	~~HOOD DETAILS~~		X
~~QF712~~	~~HOOD DETAILS~~		X
~~QF713~~	~~HOOD DETAILS~~		X
~~QF714~~	~~HOOD DETAILS~~		X
~~QF715~~	~~HOOD DETAILS~~		X
~~QF716~~	~~HOOD DETAILS~~		X

NUMBER	SHEET NAME	SD 08/07/2015	30% DD 01/22/2016
~~QF717~~	~~HOOD DETAILS~~		X
~~QF718~~	~~HOOD DETAILS~~		X
~~QF719~~	~~HOOD DETAILS~~		X
~~QF720~~	~~HOOD DETAILS~~		X
~~QF721~~	~~HOOD DETAILS~~		X
~~QF722~~	~~HOOD DETAILS~~		X
~~QF723~~	~~HOOD DETAILS~~		X
~~QF724~~	~~HOOD DETAILS~~		X
~~QF725~~	~~HOOD DETAILS~~		X
~~QF726~~	~~HOOD DETAILS~~		X
~~QF727~~	~~HOOD DETAILS~~		X
~~QF728~~	~~HOOD DETAILS~~		X
~~QF729~~	~~HOOD DETAILS~~		X
~~QF730~~	~~HOOD DETAILS~~		X
~~QF731~~	~~HOOD DETAILS~~		X
~~QF732~~	~~HOOD DETAILS~~		X
~~QF733~~	~~HOOD DETAILS~~		X
~~QF734~~	~~HOOD DETAILS~~		X
~~QF750~~	~~WALK-IN DETAILS~~		X
~~QF751~~	~~WALK-IN DETAILS~~		X
~~QF752~~	~~WALK-IN DETAILS~~		X
~~QF753~~	~~WALK-IN DETAILS~~		X
~~QF754~~	~~WALK-IN DETAILS~~		X
~~QF755~~	~~WALK-IN DETAILS~~		X
~~QF760~~	~~DISH MACHINE DETAILS~~		X
~~QF765~~	~~ACCUMULATOR DETAILS~~		X
~~QF766~~	~~ACCUMULATOR DETAILS~~		X
~~P000~~	~~PLUMBING LEGEND, GENERAL NOTES & DRAWING LIST~~		X
~~P001~~	~~PLUMBING SCHEDULE SHEET 1~~		X
~~P002~~	~~PLUMBING SCHEDULE SHEET 2~~		X
~~P003~~	~~PLUMBING DETAIL SHEET 1~~		X
~~P004~~	~~PLUMBING DETAIL SHEET 2~~		X
~~P100.2~~	~~PLUMBING BASMENT LEVEL PLAN - DINING NORTH~~		X
~~P100.3~~	~~PLUMBING BASEMENT LEVEL PLAN - DINING SOUTH~~		X
~~P101.2~~	~~PLUMBING LOWERL LEVEL PLAN - DINING NORTH~~		X
~~P300~~	~~PLUMBING PIPING DIAGRAMS~~		X
~~PD100.1~~	~~PLUMBING BASEMENT DEMOLITION PLAN - BLANCHARD NORTH~~		X
~~PD100.2~~	~~PLUMBING BASEMENT DEMOLITION PLAN - BLANCHARD SOUTH~~		X
~~PD101.1~~	~~PLUMBING LOWER LEVEL DEMOLITION PLAN - BLANCHARD NORTH~~		X
~~PD101.2~~	~~PLUMBING LOWER LEVEL DEMOLITION PLAN - BLANCHARD SOUTH~~		X
~~PD102.1~~	~~PLUMBING MIDDLE LEVEL DEMOLITION PLAN - BLANCHARD NORTH~~		X
~~PD102.2~~	~~PLUMBING MIDDLE LEVEL DEMOLITION PLAN - BLANCHARD SOUTH~~		X
~~FP000~~	~~FIRE PROTECTION LEGEND, GENERAL NOTES, SCHEDULE & DRAWING LIST~~		X
~~FP001~~	~~FIRE PROTECTION DETAIL SHEET 1~~		X
~~FP101.2~~	~~FIRE PROTECTION LOWER LEVEL RCP PLAN - DINING NORTH~~		X
~~FPD100.1~~	~~FIRE PROTECTION BASEMENT DEMOLITION PLAN - BLANCHARD NORTH~~		X
~~FPD100.2~~	~~FIRE PROTECTION BASEMENT DEMOLITION PLAN - BLANCHARD SOUTH~~		X
~~FPD101.1~~	~~FIRE PROTECTION LOWER LEVEL DEMOLITION PLAN - BLANCHARD NORTH~~		X
~~FPD101.2~~	~~FIRE PROTECTION LOWER LEVEL DEMOLITION PLAN - BLANCHARD SOUTH~~		X
~~M001~~	~~HVAC SCHEDULES SHEET #1~~	X	X
~~M100.1~~	~~HVAC BASEMENT PLAN - BLANCHARD~~		X
~~M101.1~~	~~HVAC LOWER LEVEL DUCTWORK PLAN - BLANCHARD~~		X
~~M101.2~~	~~HVAC LOWER LEVEL DUCTWORK PLAN - DINING NORTH~~	X	X
~~M101.3~~	~~HVAC LOWER LEVEL DUCTWORK PLAN - DINING SOUTH~~	X	X
~~M102.1~~	~~HVAC MIDDLE LEVEL DUCTWORK PLAN - BLANCHARD~~		X
~~M102.2~~	~~HVAC UPPER LEVEL DUCTWORK PLAN - DINING NORTH~~	X	X
~~M102.3~~	~~HVAC UPPER LEVEL DUCTWORK PLAN - DINING SOUTH~~	X	X
~~M103.1~~	~~HVAC UPPER LEVEL DUCTWORK PLAN - BLANCHARD~~		X
~~M104.1~~	~~HVAC ROOF DUCTWORK PLAN - BLANCHARD~~		X
~~M201~~	~~HVAC AIR RISER DIAGRAM~~	X	X
~~M202~~	~~HVAC WATER FLOW/ RISER DIAGRAM~~	X	X
~~E001~~	~~ELECTRICAL SYMBOL LIST~~		X
~~E002~~	~~ELECTRICAL LEGEND OF EQUIPTMENT~~		X
~~E101.1~~	~~ELECTRICAL LOWER LEVEL FLOOR PLAN - BLANCHARD~~		X
~~E101.2~~	~~ELECTRICAL LOWER LEVEL FLOOR PLAN POWER - DINING NORTH~~		X
~~E101.3~~	~~ELECTRICAL LOWER LEVEL FLOOR PLAN POWER - DINING SOUTH~~		X
~~E102.1~~	~~ELECTRICAL MIDDLE LEVEL FLOOR PLAN - BLANCHARD~~		X
~~E102.2~~	~~ELECTRICAL MIDDLE LEVEL FLOOR PLAN POWER - DINING NORTH~~		X
~~E103.1~~	~~ELECTRICAL UPPER LEVEL FLOOR PLAN - BLANCHARD~~		X
~~E301.1~~	~~ELECTRICAL LOWER LEVEL FIRE ALARM FLOOR PLAN - BLANCHARD~~		X
~~E301.2~~	~~ELECTRICAL LOWER LEVEL FLOOR PLAN FIRE ALARM - DINING NORTH~~		X
~~E301.3~~	~~ELECTRICAL LOWER LEVEL FLOOR PLAN FIRE ALARM - DINING SOUTH~~		X
~~E302.1~~	~~ELECTRICAL MIDDLE LEVEL FLOOR PLAN FIRE ALARM FLOOR PLAN BLANCHARD~~		X
~~E302.2~~	~~ELECTRICAL MIDDLE LEVEL FLOOR PLAN FIRE ALARM - DINING NORTH~~		X
~~E303.1~~	~~ELECTRICAL UPPER LEVEL FIRE ALARM FLOOR PLAN - BLANCHARD~~		X
~~E303.2~~	~~ELECTRICAL ROOF PLAN FIRE ALARM - DINING NORTH~~		X
~~E401~~	~~ELECTRICAL - BOH/COLD PREP & EQUIPTMENT KITCHEN SCHEDULE~~		X
~~E402~~	~~ELECTRICAL - INTERNATIONAL/ PASTA & EQUIPTMENT KITCHEN SCHEDULE~~		X
~~E403~~	~~ELECTRICAL - COMFORT / GRILL & EQUIPTMENT KITCHEN SCHEDULE~~		X
~~E404~~	~~ELECTRICAL SALAD BAR AND EQUIPTMENT KITCHEN SCHEDULE~~		X
~~E405~~	~~ELECTRICAL ALL DAY BREAKFAST & EQUIPTMENT KITCHEN SCHEDULE~~		X
~~E406~~	~~ELECTRICAL WOK. MADE FOR YOU/ KOSHER & EQUIPTMENT KITCHEN SCHEDULES~~		X
~~E407~~	~~ELECTRICAL DISHROOM & EQUIPTMENT KITCHEN SCHEDULE~~		X
~~E408~~	~~ELECTRICAL - GRAB & GO & EQUIPTMENT KITCHEN SCHEDULES~~		X
~~E500~~	~~ONE LINE POWER RISER NEW DINING HALL~~		X
~~E501~~	~~EXISTING BLANCHARD ONE LINE POWER RISER~~		X
~~E502~~	~~ELECTRICAL BLANCHARD EMERGENCY RISER PART PLAN~~		X
~~E503~~	~~FIRE ALARM RISER~~		X
~~E600~~	~~ELECTRICAL PANEL SCHEDULES~~		X
~~E700~~	~~ELECTRICAL DETAIL SHEET #1~~		X
~~E701~~	~~ELECTRICAL DETAIL SHEET #2~~		X
~~ED100.1~~	~~ELECTRICAL EXISTING BASEMENT PLAN - BLANCHARD~~		X
~~ED101.1~~	~~ELECTRICAL LOWER LEVEL DEMOLITION PLAN - BLANCHARD~~		X
~~ED101.2~~	~~ELECTRICAL MIDDLE LEVEL DEMOLITION PLAN - BLANCHARD~~		X
~~TC101~~	~~TELECOMM 1ST FLOOR DINING PLAN~~		X
~~TC101.1~~	~~TC LOWER LEVEL PLAN - BLANCHARD~~		X
~~TC101.2~~	~~TC LOWER LEVEL PLAN - DINING NORTH~~		X
~~TC101.3~~	~~TC LOWER LEVEL PLAN - DINING SOUTH~~		X
~~TC102.1~~	~~TC MIDDLE LEVEL PLAN - BLANCHARD~~		X
~~TC102.2~~	~~TELECOMM UPPER LEVEL PLAN - DINING NORTH~~		X
~~TC102.3~~	~~TELECOMM UPPER LEVEL PLAN - DINING SOUTH~~		X
~~TC103.1~~	~~TELECOMM UPPER LEVEL PLAN - BLANCHARD~~		X
~~TC201~~	~~TELECOMM PART PLANS~~		X
~~TC301~~	~~TELECOMM RISER~~		X
~~TD001~~	~~TELECOMM SYMBOL LIST~~		X
~~000~~	~~SHEET TITLE~~		

Bergmeyer
Architecture and Interiors
Bergmeyer Associates, Inc.
51 Sleeper Street
Boston, MA 02210
Phone 617 542 1025
Fax 617 542 1026
www.bergmeyer.com

© Copyright 2016 Bergmeyer Associates, Inc.

NO.	BY	DATE	DESCRIPTION
	RL	02.26.2016	PERMIT PLANS

MOUNT HOLYOKE COLLEGE
COMMUNITY CENTER WITH DINING

50 College St, South Hadley, MA 01075

GENERAL NOTES

DRAWN BY: RL
REVIEWED BY: DF
JOB NO: 15048.00

G001

C:\Users\rlanzafame\Desktop\LOCAL\15048_MT HOLYOKE_Central_rlanzafame.rvt

1/22/2016 5:29:50 PM

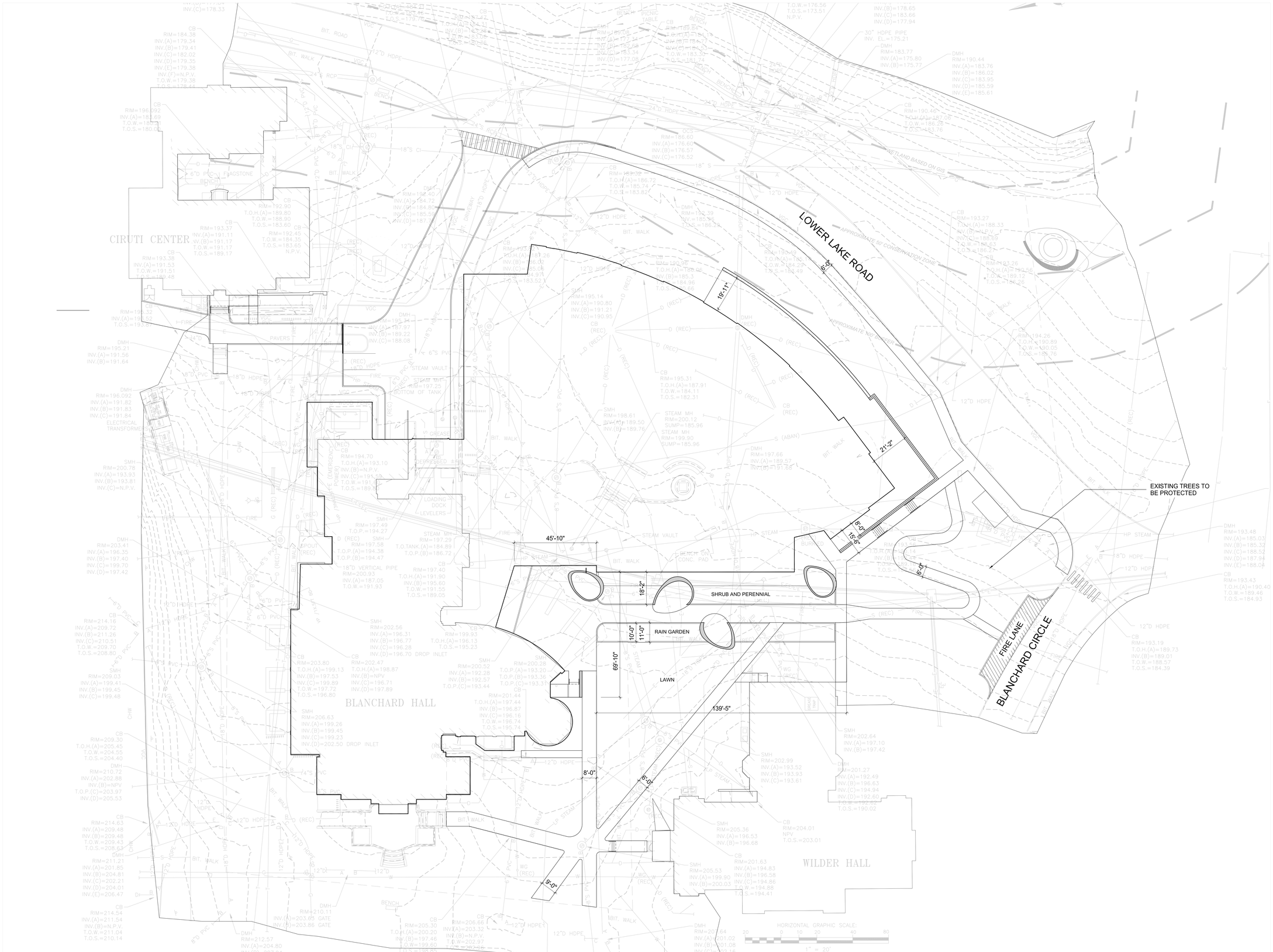

01 Layout Plan

SCALE: 1" = 20'-0"

Bergmeyer

Architecture and Interiors
Bergmeyer Associates, Inc.
51 Sleeper Street
Boston, MA 02210
Phone 617 542 1005
Fax 617 542 1006
www.bergmeyer.com

© Copyright 2013 Bergmeyer Associates, Inc.

Ground Inc.
8 Cutler Street - Somerville, MA 02143
617 623 5800 www.groundinc.com

NO.	BY	DATE	DESCRIPTION
		02.26.2016	PERMIT PLANS

MOUNT HOLYOKE COLLEGE
CENTRALIZED DINING & COMMUNITY CENTER

50 College St, South Hadley, MA 01075

LAYOUT PLAN

DRAWN BY:

REVIEWED BY:

JOB NO:

L1.01

C:\Users\terrizarzame\Desktop\LOCAL\15048_MT HOLYOKE_Central_terrazzatimes.rvt

8/4/2015 8:24:15 AM

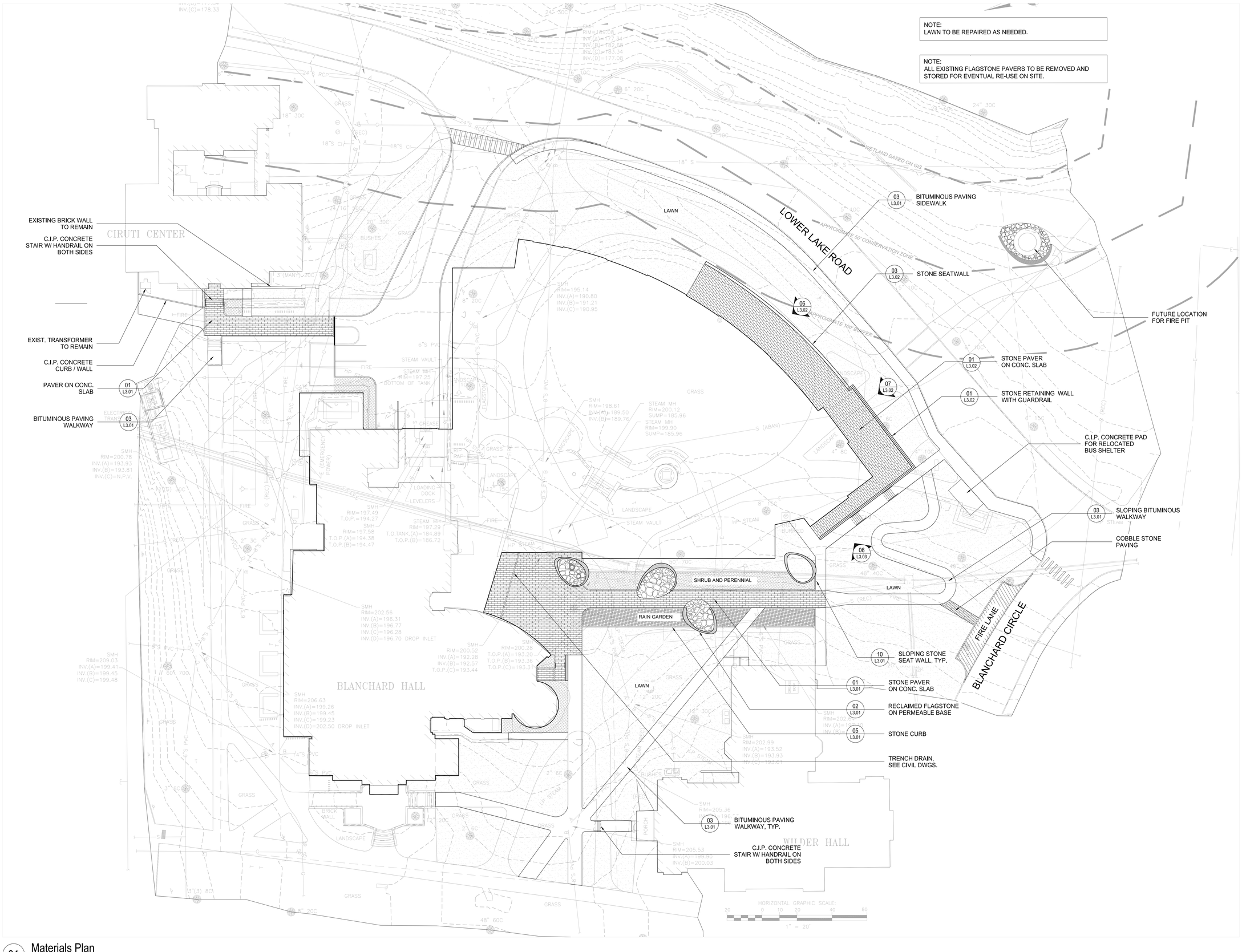

01 Materials Plan

SCALE: 1" = 20'-0"

C:\Users\lianzatima\Desktop\LOCAL\15948_MT HOLYOKE_Central_lianzatima.rvt

8/4/2015 8:24:15 AM

Bergmeyer

Architecture and Interiors
Bergmeyer Associates, Inc.
51 Sleeper Street
Boston, MA 02210
Phone 617 542 1000
Fax 617 542 1005
www.bergmeyer.com

© Copyright 2013 Bergmeyer Associates, Inc.

Ground Inc.
81 Clarkton Street, Somerville, MA 02143
617 776 0350 www.groundinc.com

NO.	BY	DATE	DESCRIPTION
		02.26.2016	PERMIT PLANS

MOUNT HOLYOKE COLLEGE
CENTRALIZED DINING & COMMUNITY CENTER

50 College St, South Hadley, MA 01075

MATERIAL PLAN

DRAWN BY:

REVIEWED BY:

JOB NO:

L1.02

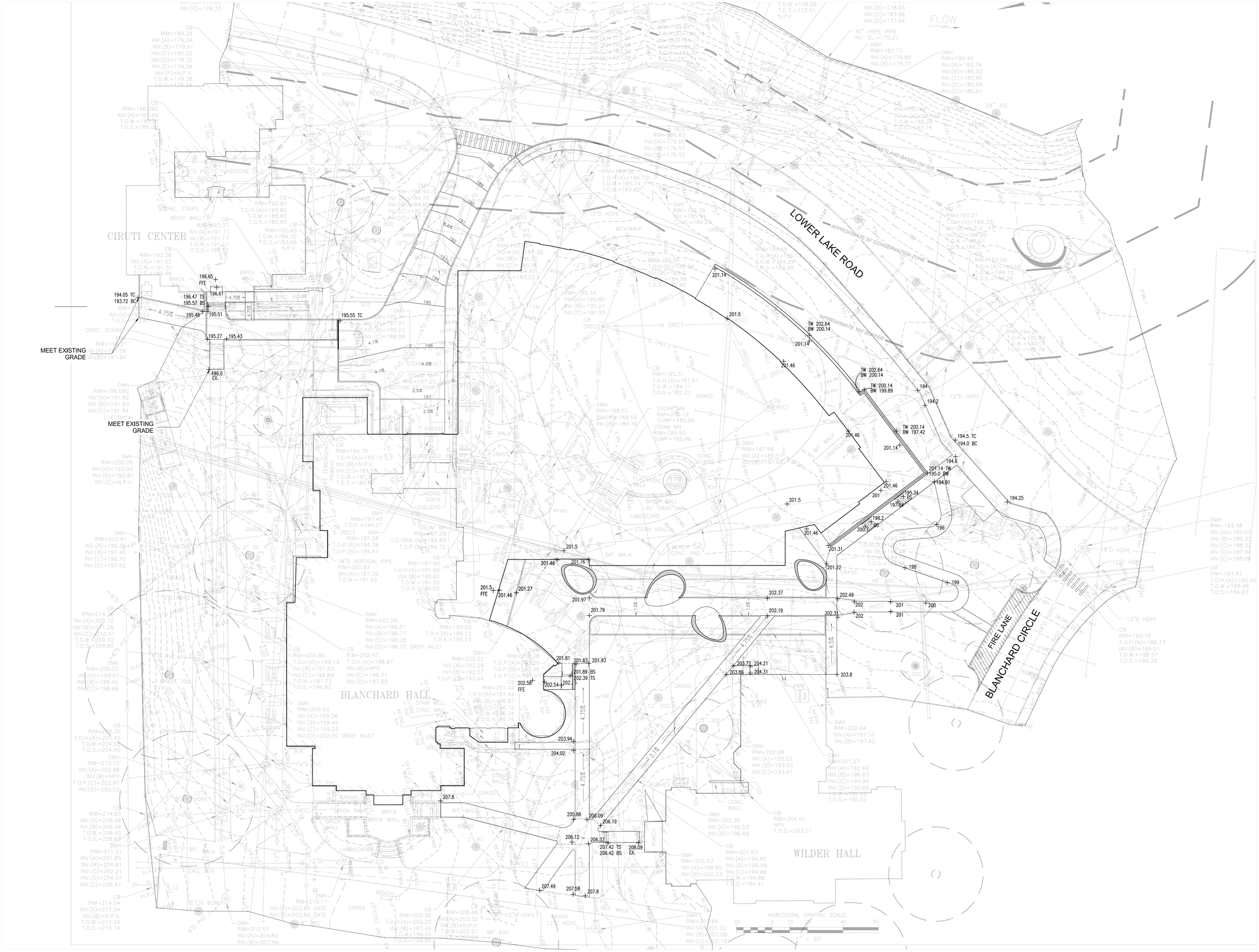

01 Grading Plan

SCALE: 1" = 20'-0"

8/4/2015 8:24:15 AM C:\Users\rfanzalone\Desktop\LOCAL\15048_MT HOLYOKE_Central_rfanzalone.rvt

Bergmeyer

Architecture and Interiors
Bergmeyer Associates, Inc.
51 Sleeper Street
Boston, MA 02210
Phone 617 542 1005
Fax 617 542 1006
www.bergmeyer.com

© Copyright 2013 Bergmeyer Associates, Inc.

Ground Inc.
81 Curtain Street - Somerville, MA 02143
617 623 9600 www.groundinc.com

NO.	BY	DATE	DESCRIPTION
		02.26.2016	PERMIT PLANS

MOUNT HOLYOKE COLLEGE
CENTRALIZED DINING & COMMUNITY CENTER

50 College St, South Hadley, MA 01075

GRADING PLAN

DRAWN BY:

REVIEWED BY:

JOB NO:

L1.03

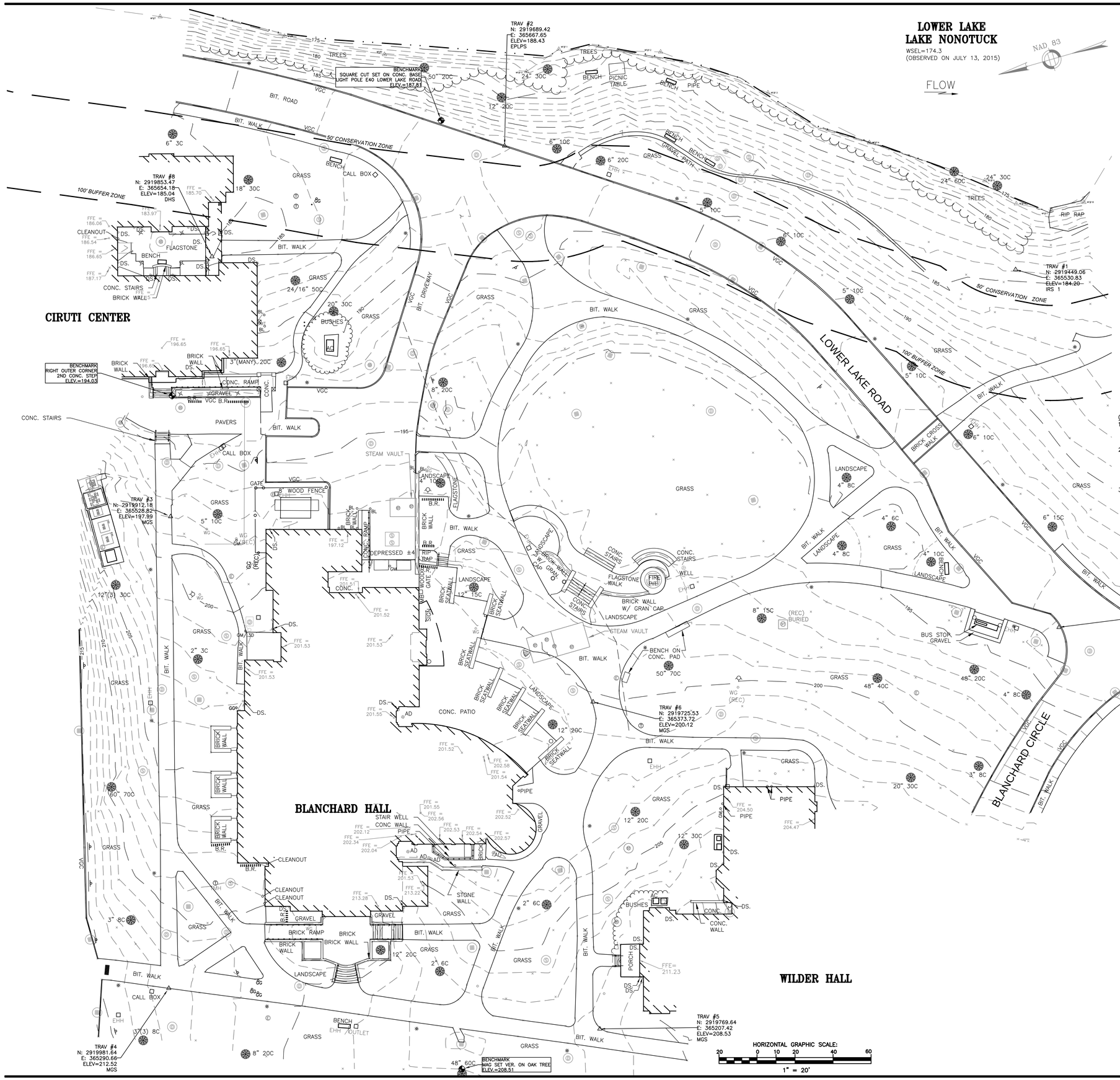

LEGEND AND ABBREVIATIONS

WSO	WATER SHUTOFF		GAS METER
WG	WATER GATE		GM UNKNOWN GATE
GG	GAS GATE		PM PARKING METER
CB	CATCH BASIN		RISER ELECTRIC RISER
AD	AREA DRAIN		BL BOLLARD
CMH	CABLE MANHOLE		DETECTABLE WARNING PANEL
EMH	ELECTRIC MANHOLE		FIRE FIRE LINE
EHH	ELECTRIC HANDHOLE		E ELECTRIC LINE
DMH	DRAIN MANHOLE		W WATER LINE
SMH	SEWER MANHOLE		D DRAIN LINE
TMH	TELEPHONE MANHOLE		S SEWER LINE
HYD.	FIRE HYDRANT		G GAS LINE
	SIGN		T TELEPHONE LINE
LP	ELECTRIC LIGHT POLE		CHW CHILLED WATERLINE
	TRAVERSE POINT		LPSTEAM LOW PRESSURE STEAM
	YARD LIGHT		HPSTEAM HIGH PRESSURE STEAM
UPL	UTILITY POLE WITH LIGHT		AC AIR CONDITIONER
	UTILITY POLE		BC BOTTOM OF CURB
R.D.	ROOF DRAIN		BIT. BITUMINOUS
DS.	DOWN SPOUT		CONC. CONCRETE
G	VERTICAL GAS PIPE		EXIST. EXISTING
V	PVC VENT PIPE		FFE FINISHED FLOOR ELEVATION
B.R.	BIKE RACK		GRAN. GRANITE
24.39	SPOT ELEVATION		HDPE HIGH DENSITY POLYETHYLENE
	6" TREE–30' DIA. CANOPY		IRS IRON ROD SET
	HEDGE LINE		MGS MAG NAIL SET
	TREE CANOPY LINE		N.P.V. NO PIPE VISIBLE
	WOOD FENCE		OCS OUTLET CONTROL STRUCTURE
	STEEL HAND RAIL		PVC POLYVINYL CHLORIDE
	EDGE OF WATER		(REC.) RECORD INFORMATION
	WETLAND LIMIT		T.O.P. TOP OF PIPE
	WETLAND BUFFER		T.O.H. TOP OF HOOD
	BENCHMARK		T.O.S. TOP OF SEDIMENT
			T.O.W. TOP OF WATER
			VGC VERTICAL GRANITE CURB

GENERAL NOTES:

1. THE EXISTING CONDITIONS SHOWN ON THIS BASE MAP ARE THE RESULT OF AN INSTRUMENT SURVEY PERFORMED ON THE GROUND BY GREEN INTERNATIONAL AFFILIATES, INC. BETWEEN JULY 13 AND JULY 21, 2015, AND JANUARY 7, 2016.
2. HORIZONTAL AND VERTICAL CONTROL WAS ESTABLISHED WITH STATIC GPS VECTORS CALCULATED BY NATIONAL GEODETIC SURVEY'S OPUS SERVICE, ON JULY 14, 2015 BY GREEN. HORIZONTAL DATUM IS BASED ON THE MASSACHUSETTS STATE PLANE COORDINATE SYSTEM (NAD83 (2011 EPOCH 2010.0000)), VERTICAL DATUM IS NAVD88 (COMPUTED USING GEOID12B). THE UNIT OF MEASUREMENTS IS US FEET
3. WETLAND LIMITS AND BUFFER ZONES ARE SHOWN BASED ON WETLAND DELINEATION PERFORMED BY GREEN INTERNATIONAL AFFILIATES, INC. ON JANUARY 7, 2016.

Bergmeyer
Architecture and Interiors
Bergmeyer Associates, Inc.
53 State Street
Boston, MA 02210
Phone 617 542-7025
Fax 617 542-7635
www.bergmeyer.com

© Copyright 2016 Bergmeyer Associates, Inc.

Project Civil Engineer:
GREEN INTERNATIONAL AFFILIATES, INC.
Civil and Structural Engineers
239 Littleton Rd, Suite 3
Westford, Massachusetts
GreenIntl.com
(978) 923-0400

NO.	BY	DATE	DESCRIPTION
	KK	02.26.2016	PERMIT PLANS

MOUNT HOLYOKE COLLEGE
COMMUNITY CENTER WITH DINING

50 College St, South Hadley, MA 01075

EXISTING CONDITIONS TOPOGRAPHIC PLAN

DRAWN BY:	KK
REVIEWED BY:	LB
JOB NO:	15040.002

C101

1/20/2016 10:08:51 AM C:\Users\francsalme\Desktop\LOCAL\15045_MT HOLYOKE_Central_\francsalme.rvt

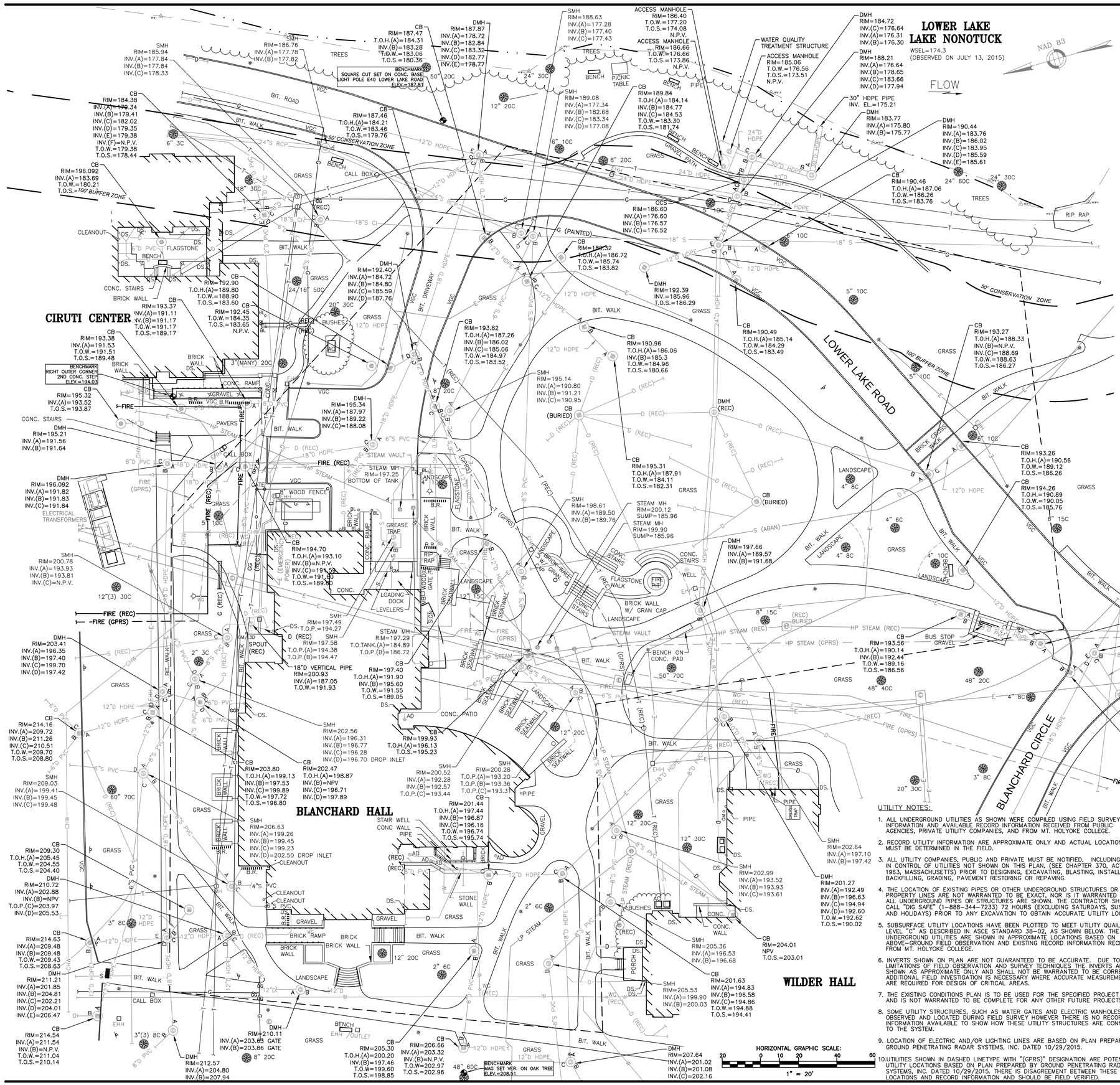

LEGEND AND ABBREVIATIONS

WSO	WATER SHUTOFF		GAS METER
WG	WATER GATE	GM	UNKNOWN GATE
GG	GAS GATE	PM	PARKING METER
CB	CATCH BASIN	RISER	ELECTRIC RISER
AD	AREA DRAIN	BL	BOLLARD
CMH	CABLE MANHOLE		DETECTABLE WARNING PANEL
EMH	ELECTRIC MANHOLE	FIRE	FIRE LINE
EHH	ELECTRIC HANDHOLE	E	ELECTRIC LINE
DMH	DRAIN MANHOLE	W	WATER LINE
SMH	SEWER MANHOLE	D	DRAIN LINE
TMH	TELEPHONE MANHOLE	S	SEWER LINE
HYD.	FIRE HYDRANT	G	GAS LINE
	SIGN	T	TELEPHONE LINE
ELP	ELECTRIC LIGHT POLE	CHW	CHILLED WATERLINE
	TRAVERSE POINT	LPSTEAM	LOW PRESSURE STEAM
	YARD LIGHT	HPSTEAM	HIGH PRESSURE STEAM
UPL	UTILITY POLE WITH LIGHT	AC	AIR CONDITIONER
	UTILITY POLE	BC	BOTTOM OF CURB
R.D.	ROOF DRAIN	BIT.	BITUMINOUS
DS.	DOWN SPOUT	CONC.	CONCRETE
G	VERTICAL GAS PIPE	EXIST.	EXISTING
V	PVC VENT PIPE	FFE	FINISHED FLOOR ELEVATION
B.R.	BIKE RACK	GRAN.	GRANITE
24.39	SPOT ELEVATION	HDPE	HIGH DENSITY POLYETHYLENE
6" 30C	6" TREE–30' DIA. CANOPY	IRS	IRON ROD SET
	HEDGE LINE	MGS	MAG NAIL SET
	TREE CANOPY LINE	N.P.V.	NO PIPE VISIBLE
	WOOD FENCE	OCS	OUTLET CONTROL STRUCTURE
	STEEL HAND RAIL	PVC	POLYVINYL CHLORIDE
	EDGE OF WATER	(REC.)	RECORD INFORMATION
	WETLAND LIMIT	T.O.P.	TOP OF PIPE
	WETLAND BUFFER	T.O.H.	TOP OF HOOD
	BENCHMARK	T.O.S.	TOP OF SEDIMENT
		T.O.W.	TOP OF WATER
		VGC	VERTICAL GRANITE CURB

GENERAL NOTES:

1. THE EXISTING CONDITIONS SHOWN ON THIS BASE MAP ARE THE RESULT OF AN INSTRUMENT SURVEY PERFORMED ON THE GROUND BY GREEN INTERNATIONAL AFFILIATES, INC. BETWEEN JULY 13 AND JULY 21, 2015, AND JANUARY 7, 2016.
2. HORIZONTAL AND VERTICAL CONTROL WAS ESTABLISHED WITH STATIC GPS VECTORS CALCULATED BY NATIONAL GEODETIC SURVEY'S OPUS SERVICE, ON JULY 14, 2015 BY GREEN. HORIZONTAL DATUM IS BASED ON THE MASSACHUSETTS STATE PLANE COORDINATE SYSTEM (NAD83 (2011 EPOCH 2010.0000)), VERTICAL DATUM IS NAVD88 (COMPUTED USING GEOID12B). THE UNIT OF MEASUREMENTS IS US FEET
3. WETLAND LIMITS AND BUFFER ZONES ARE SHOWN BASED ON WETLAND DELINEATION PERFORMED BY GREEN INTERNATIONAL AFFILIATES, INC. ON JANUARY 7, 2016.

UTILITY NOTES:

1. ALL UNDERGROUND UTILITIES AS SHOWN WERE COMPILED USING FIELD SURVEY INFORMATION AND AVAILABLE RECORD INFORMATION RECEIVED FROM PUBLIC AGENCIES, PRIVATE UTILITY COMPANIES, AND FROM MT. HOLYOKE COLLEGE.
2. RECORD UTILITY INFORMATION ARE APPROXIMATE ONLY AND ACTUAL LOCATIONS MUST BE DETERMINED IN THE FIELD.
3. ALL UTILITY COMPANIES, PUBLIC AND PRIVATE MUST BE NOTIFIED, INCLUDING THOSE IN CONTROL OF UTILITIES NOT SHOWN ON THIS PLAN, (SEE CHAPTER 370, ACTS OF 1963, MASSACHUSETTS) PRIOR TO DESIGNING, EXCAVATING, BLASTING, INSTALLING, BACKFILLING, GRADING, PAVEMENT RESTORING OR REPAVING.
4. THE LOCATION OF EXISTING PIPES OR OTHER UNDERGROUND STRUCTURES OR PROPERTY LINES ARE NOT WARRANTED TO BE EXACT, NOR IS IT WARRANTED THAT ALL UNDERGROUND PIPES OR STRUCTURES ARE SHOWN. THE CONTRACTOR SHALL CALL "DIG SAFE" (1–888–344–7233) 72 HOURS (EXCLUDING SATURDAYS, SUNDAYS AND HOLIDAYS) PRIOR TO ANY EXCAVATION TO OBTAIN ACCURATE UTILITY LOCATIONS.
5. SUBSURFACE UTILITY LOCATIONS HAVE BEEN PLOTTED TO MEET UTILITY QUAILTY LEVEL "C" AS DESCRIBED IN ASCE STANDARD 38–02, AS SHOWN BELOW. THE UNDERGROUND UTILITIES ARE SHOWN IN APPROXIMATE LOCATIONS BASED ON ABOVE–GROUND FIELD OBSERVATION AND EXISTING RECORD INFORMATION RECEIVED FROM MT. HOLYOKE COLLEGE.
6. INVERTS SHOWN ON PLAN ARE NOT GUARANTEED TO BE ACCURATE. DUE TO THE LIMITATIONS OF FIELD OBSERVATION AND SURVEY TECHNIQUES THE INVERTS ARE SHOWN AS APPROXIMATE ONLY AND SHALL NOT BE WARRANTED TO BE CORRECT. ADDITIONAL FIELD INVESTIGATION IS NECESSARY WHERE ACCURATE MEASUREMENTS ARE REQUIRED FOR DESIGN OF CRITICAL AREAS.
7. THE EXISTING CONDITIONS PLAN IS TO BE USED FOR THE SPECIFIED PROJECT ONLY AND IS NOT WARRANTED TO BE COMPLETE FOR ANY OTHER FUTURE PROJECTS.
8. SOME UTILITY STRUCTURES, SUCH AS WATER GATES AND ELECTRIC MANHOLES, WERE OBSERVED AND LOCATED DURING FIELD SURVEY HOWEVER THERE IS NO RECORD INFORMATION AVAILABLE TO SHOW HOW THESE UTILITY STRUCTURES ARE CONNECTED TO THE SYSTEM.
9. LOCATION OF ELECTRIC AND/OR LIGHTING LINES ARE BASED ON PLAN PREPARED BY GROUND PENETRATING RADAR SYSTEMS, INC. DATED 10/29/2015.
10. UTILITIES SHOWN IN DASHED LINETYPE WITH "(GPRS)" DESIGNATION ARE POTENTIAL UTILITY LOCATIONS BASED ON PLAN PREPARED BY GROUND PENETRATING RADAR SYSTEMS, INC. DATED 10/29/2015. THERE IS DISAGREEMENT BETWEEN THESE LOCATIONS AND RECORD INFORMATION AND SHOULD BE FIELD VERIFIED.

SUMMARY OF UTILITY MAPPING QUALITY LEVELS:

THE FOLLOWNG IS A SUMMARY OF THE SURVEY MAPPING LEVELS FOR UTILITIES AS DESCRIBED IN ASCE STANDARD 38–02, "STANDARD GUIDELINE FOR THE DEPICTION OF EXISTING SUBSURFACE UTILITY DATA". THESE GUIDELINES ARE MORE FULLY DESCRIBED IN THE ASCE STANDARD.

UTILITY QUALITY LEVEL A:
PRECISE HORIZONTAL AND VERTICAL LOCATION OF UTILITIES OBTAINED BY THE ACTUAL EXPOSURE (OR VERIFICATION OF PREVIOUSLY EXPOSED AND SURVEYED UTILITIES) AND SUBSEQUENT MEASUREMENT OF SUBSURFACE UTILITIES, USUALLY AT A SPECIFIC POINT. MINIMALLY INTRUSIVE EXCAVATION EQUIPMENT IS TYPICALLY USED TO MINIMIZE THE POTENTIAL FOR UTILITY DAMAGE. A PRECISE HORIZONTAL AND VERTICAL LOCATION, AS WELL AS OTHER UTILITY ATTRIBUTES, IS SHOWN ON PLAN DOCUMENTS. ACCURACY IS TYPICALLY SET TO 15–MM VERTICAL AND TO APPLICABLE HORIZONTAL SURVEY AND MAPPING ACCURACY AS DEFINED OR EXPECTED BY THE PROJECT OWNER.

UTILITY QUALITY LEVEL B:
INFORMATION OBTAINED THROUGH THE APPLICATION OF APPROPRIATE SURFACE GEOPHYSICAL METHODS TO DETERMINE THE EXISTENCE AND APPROXIMATE HORIZONTAL POSITION OF SUBSURFACE UTILITIES. QUALITY LEVEL B DATA SHOULD BE REPRODUCIBLE BY SURFACE GEOPHYSICS AT ANY POINT OF THEIR DEPICTION. THIS INFORMATION IS SURVEYED TO APPLICABLE TOLERANCES DEFINED BY THE PROJECT AND REDUCED ONTO PLAN DOCUMENTS.

UTILITY QUALITY LEVEL C:
INFORMATION OBTAINED BY SURVEYING AND PLOTTING VISIBLE ABOVE–GROUND UTILITY FEATURES AND BY USING PROFESSIONAL JUDGMENT IN CORRELATING THIS INFORMATION TO QUALITY LEVEL D INFORMATION.

UTILITY QUALITY LEVEL D:
INFORMATION DERIVED FROM EXISTING RECORDS OR ORAL RECOLLECTIONS.INFORMATION DERIVED FROM EXISTING RECORDS OR ORAL RECOLLECTIONS.

Bergmeyer

Architecture and Interiors
Bergmeyer Associates, Inc.
53 State Street
Boston, MA 02210
Phone 617 742-7025
Fax 617 742-7035
www.bergmeyer.com

© Copyright 2016 Bergmeyer Associates, Inc.

Project Civil Engineer:

GREEN INTERNATIONAL AFFILIATES, INC.
Civil and Structural Engineers
239 Littleton Rd, Suite 3
Westford, Massachusetts
GreenIntl.com
(978) 923-0400

NO.	BY	DATE	DESCRIPTION
	KK	02.26.2016	PERMIT PLANS

MOUNT HOLYOKE COLLEGE COMMUNITY CENTER WITH DINING

50 College St, South Hadley, MA 01075

EXISTING CONDITIONS SITE UTILITY PLAN

DRAWN BY:	KK
REVIEWED BY:	LB
JOB NO:	15040.002

C102

C:\Users\lanzafame\Desktop\LOCAL\15048_MT.HOLYOKE_Central_\lanzafame.rvt
12/02/2016 10:08:51 AM

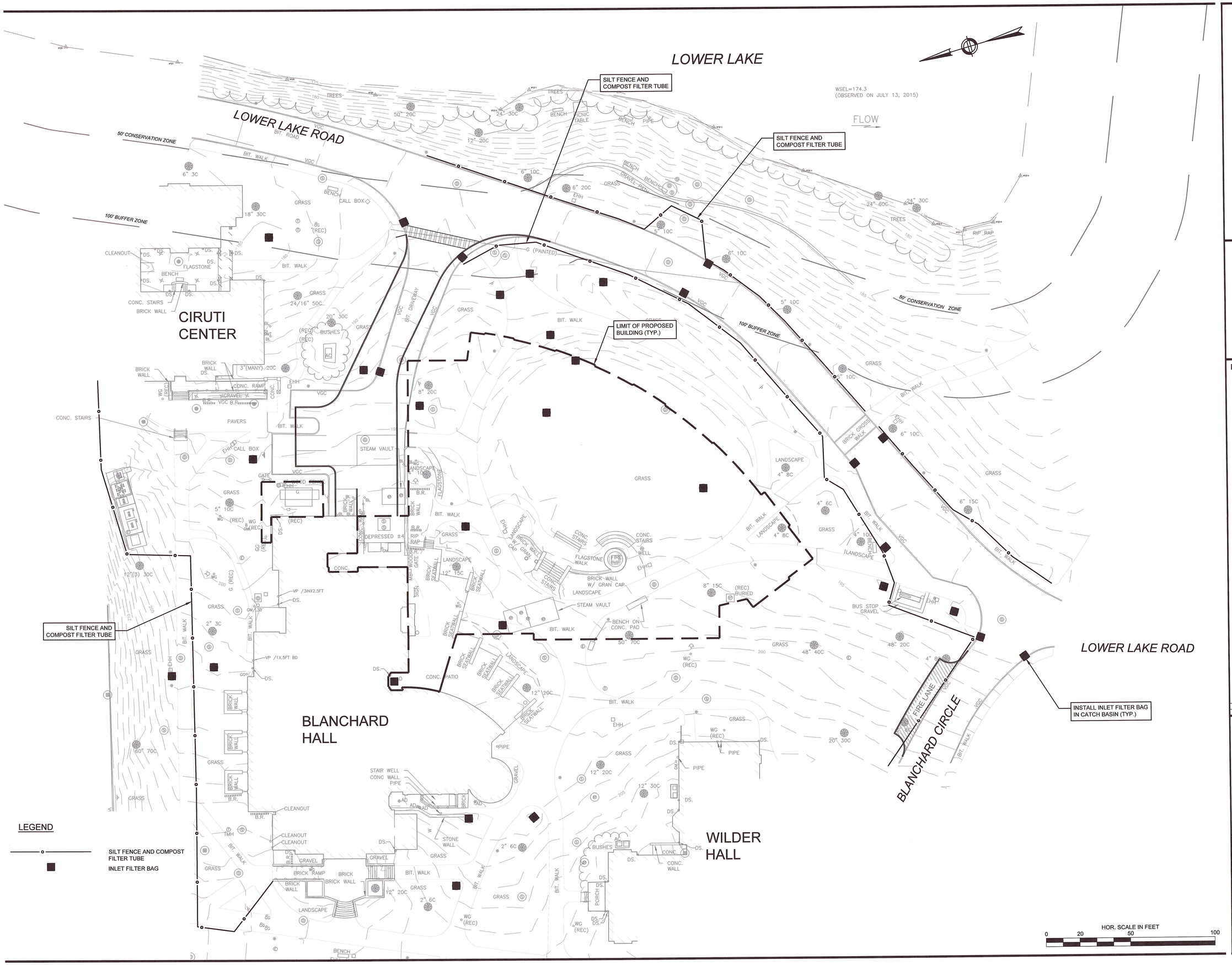

Bergmeyer

Architecture and Interiors
Bergmeyer Associates, Inc.
51 Sleeper Street
Boston, MA 02210
Phone 617 542 1005
Fax 617 542 1008
www.bergmeyer.com

© Copyright 2016 Bergmeyer Associates, Inc.

LUKE L. BOUCHER
CIVIL
No. 47602
REGISTERED PROFESSIONAL ENGINEER
COMMONWEALTH OF MASSACHUSETTS
02-26-2016

Project Civil Engineer:

GREEN INTERNATIONAL AFFILIATES, INC.
Civil and Structural Engineers
239 Littleton Rd, Suite 3
Westford, Massachusetts
GreenIntl.com
(978) 923-0400

NO.	BY	DATE	DESCRIPTION
	KK	02.26.2016	PERMIT PLANS

MOUNT HOLYOKE COLLEGE
COMMUNITY CENTER WITH DINING

50 College St, South Hadley, MA 01075

SITE EROSION & SEDIMENTATION CONTROL PLAN

DRAWN BY:	KK
REVIEWED BY:	LB
JOB NO:	15040.002

C103

1/20/2016 10:08:51 AM F:\Projects\2015\15040\dwg\Current Design\C103-Site Erosion & Sedimentation Control Plan.dwg

LOWER LAKE

LOWER LAKE ROAD

WSEL=174.3
(OBSERVED ON JULY 13, 2015)

FLOW

50' CONSERVATION ZONE

100' BUFFER ZONE

CIRUTI CENTER

LIMIT OF PROPOSED BUILDING (TYP.)

BLANCHARD HALL

WILDER HALL

BLANCHARD CIRCLE

FIRE LANE

STEAM MH
RIM=200.12
SUMP=185.96
STEAM MH
RIM=199.90
SUMP=185.96

STEAM MH
RIM=197.25
BOTTOM OF TANK

STEAM MH
RIM=197.29
T.O.TANK.(A)=184.89
T.O.P.(B)=186.72

LEGEND

D	PROPOSED DRAIN
F	PROPOSED FIRE
S	PROPOSED SEWER
ST	PROPOSED STEAM
T	PROPOSED TELEPHONE
G	PROPOSED GAS
CB	PROPOSED CATCH BASIN
DMH	PROPOSED DRAIN MANHOLE
SMH	PROPOSED SEWER MANHOLE
STMH	PROPOSED STEAM MANHOLE
TMH	PROPOSED TELEPHONE MANHOLE
WG	PROPOSED WATER GATE VALVE
GG	PROPOSED GAS GATE VALVE
RET	RETAIN
REM	REMOVE AND DISPOSE

HOR. SCALE IN FEET
0 20 50 100

C:\Users\farazalame\Desktop\LOCAL\15948_MT HOLYOKE_Central_farazalame.rvt
1/20/2016 10:08:51 AM

Bergmeyer

Architecture and Interiors
Bergmeyer Associates, Inc.
115 Kingston Street
Boston, MA 02210
Phone 617-542-1025
Fax 617-542-1069
www.bergmeyer.com

© Copyright 2016 Bergmeyer Associates, Inc.

COMMONWEALTH OF MASSACHUSETTS
LUKE L. BOUCHER
CIVIL
No. 47802
REGISTERED PROFESSIONAL ENGINEER
03-26-2016

Project Civil Engineer:

GREEN INTERNATIONAL AFFILIATES, INC.
Civil and Structural Engineers
239 Littleton Rd, Suite 3
Westford, Massachusetts
GreenIntl.com
(978) 923-0400

NO.	BY	DATE	DESCRIPTION
	KK	02.26.2016	PERMIT PLANS

MOUNT HOLYOKE COLLEGE
COMMUNITY CENTER WITH DINING

50 College St, South Hadley, MA 01075

SITE UTILITY DEMO & RELOCATION PLAN

DRAWN BY:	KK
REVIEWED BY:	LB
JOB NO:	15040.002

C104

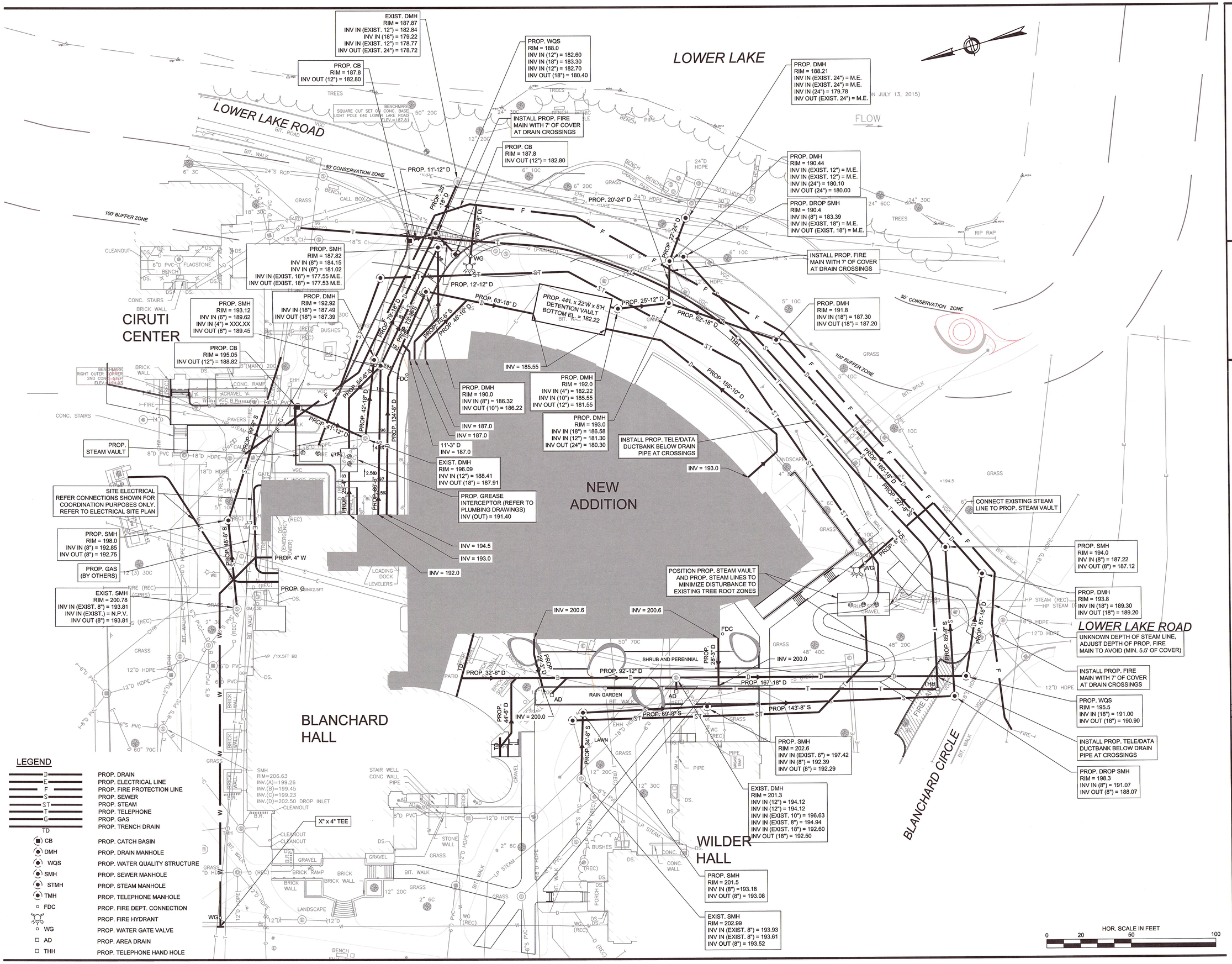

LEGEND

D	PROP. DRAIN
E	PROP. ELECTRICAL LINE
F	PROP. FIRE PROTECTION LINE
S	PROP. SEWER
ST	PROP. STEAM
T	PROP. TELEPHONE
G	PROP. GAS
TD	PROP. TRENCH DRAIN
CB	PROP. CATCH BASIN
DMH	PROP. DRAIN MANHOLE
WQS	PROP. WATER QUALITY STRUCTURE
SMH	PROP. SEWER MANHOLE
STMH	PROP. STEAM MANHOLE
TMH	PROP. TELEPHONE MANHOLE
FDC	PROP. FIRE DEPT. CONNECTION
WG	PROP. FIRE HYDRANT
WG	PROP. WATER GATE VALVE
AD	PROP. AREA DRAIN
THH	PROP. TELEPHONE HAND HOLE

F:\Projects\2015\15040\dwg\Current Design\C105-Site Utility Plan.dwg
2/25/2016 7:54:34 AM

Bergmeyer

Architecture and Interiors
Bergmeyer Associates, Inc.
51 Sleeper Street
Boston, MA 02210
Phone 617 542 1305
Fax 617 542 1308
www.bergmeyer.com

© Copyright 2016 Bergmeyer Associates, Inc.

COMMONWEALTH OF MASSACHUSETTS
LUKE L. BOUCHER
CIVIL
No. 47602
REGISTERED PROFESSIONAL ENGINEER

02-26-2016

Project Civil Engineer:

GREEN INTERNATIONAL AFFILIATES, INC.
Civil and Structural Engineers
239 Littleton Rd, Suite 3
Westford, Massachusetts
GreenIntl.com
(978) 923-0400

NO.	BY	DATE	DESCRIPTION
	KK	02.26.2016	PERMIT PLANS

MOUNT HOLYOKE COLLEGE
COMMUNITY CENTER WITH DINING

50 College St, South Hadley, MA 01075

SITE UTILITY PLAN

DRAWN BY:	KK
REVIEWED BY:	LB
JOB NO:	15040.002

C105

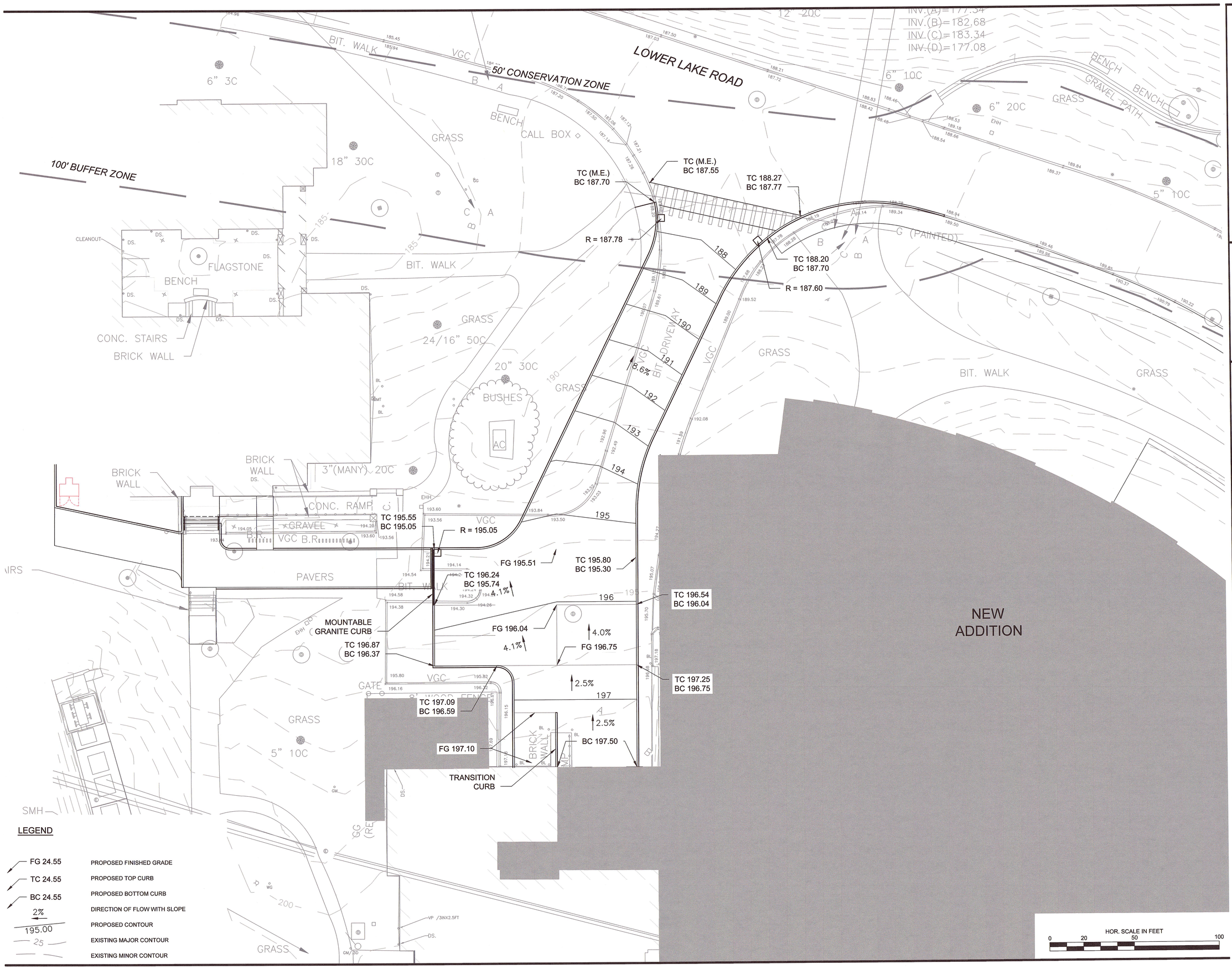

LEGEND

FG 24.55	PROPOSED FINISHED GRADE
TC 24.55	PROPOSED TOP CURB
BC 24.55	PROPOSED BOTTOM CURB
2%	DIRECTION OF FLOW WITH SLOPE
195.00	PROPOSED CONTOUR
25	EXISTING MAJOR CONTOUR
	EXISTING MINOR CONTOUR

12/20/2016 10:08:51 AM C:\Users\lbarcadinas\Desktop\LOCAL\15049_MT HOLYOKE_Central_dandalina.rvt

Bergmeyer

Architecture and Interiors
Bergmeyer Associates, Inc.
51 Sleeper Street
Boston, MA 02210
Phone 617 542 1000
Fax 617 542 1006
www.bergmeyer.com

© Copyright 2016 Bergmeyer Associates, Inc.

COMMONWEALTH OF MASSACHUSETTS
LUKE L. BOUCHER
CIVIL
No. 47802
REGISTERED PROFESSIONAL ENGINEER

02-26-2016

Project Civil Engineer:

GREEN INTERNATIONAL AFFILIATES, INC.
Civil and Structural Engineers
239 Littleton Rd, Suite 3
Westford, Massachusetts
GreenIntl.com
(978) 923-0400

NO.	BY	DATE	DESCRIPTION
	KK	02.26.2016	PERMIT PLANS

MOUNT HOLYOKE COLLEGE COMMUNITY CENTER WITH DINING

MOUNT HOLYOKE COLLEGE 1837 PICCOLAND

50 College St, South Hadley, MA 01075

LOADING DOCK GRADING PLAN

DRAWN BY:	KK
REVIEWED BY:	LB
JOB NO:	15049.002

C106

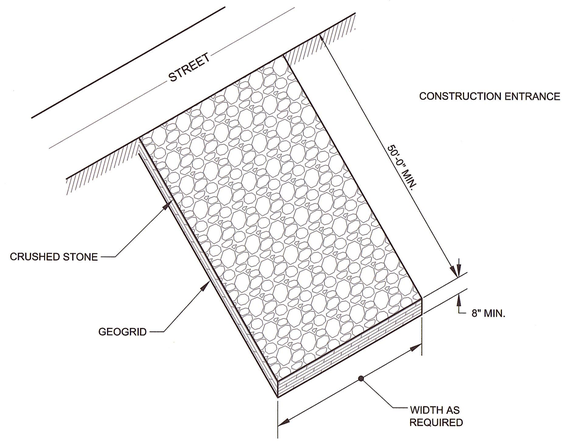

TEMPORARY CONSTRUCTION ENTRANCE DETAIL

NOT TO SCALE

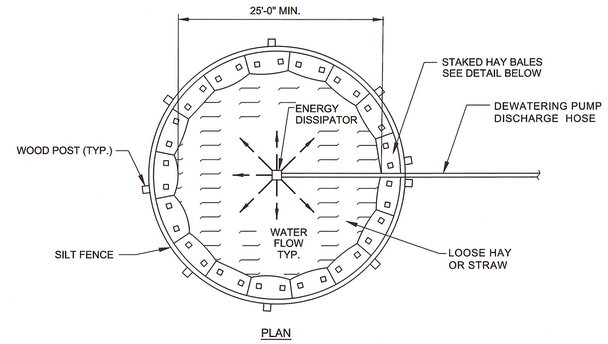

DEWATERING SEDIMENTATION BASIN DETAIL

NOT TO SCALE

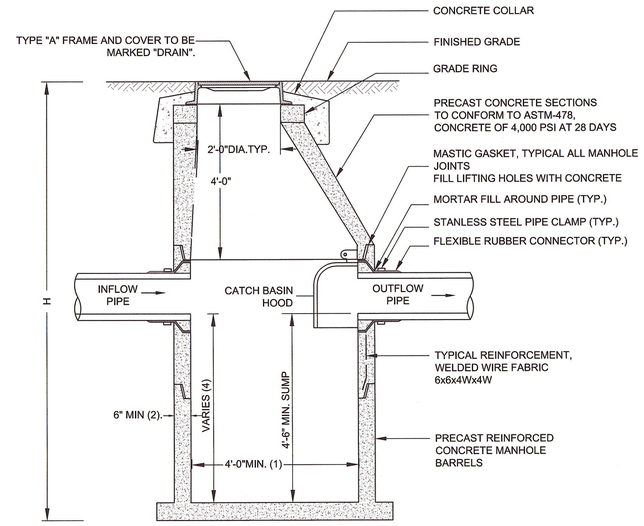

NOTES:

1. 5'-0"DIAMETER FOR ALL MANHOLE DEPTHS GREATER THAN 20 FEET OR WHEN ORDERED BY THE ENGINEER.
2. 6" MIN. WALL THICKNESS AND 7 INCH MIN. BASE THICKNESS WITH 5'-0" DIAMETER MANHOLES.
3. 6 INCH LIP OPTIONAL UNLESS OTHERWISE NOTED.

DEEP SUMP MANHOLE DETAIL

NOT TO SCALE

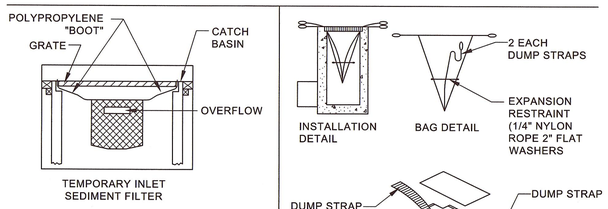

NOTE:
TEMPORARY INLET SEDIMENT FILTER TO BE INSTALLED ON ALL PAVED CATCH BASINS OR STORM INLETS. INLET FILTER TO BE SIMILAR TO "STREAMGUARD" AS MANUFACTURED BY STORMWATER SERVICES CORPORATION (206-767-0441) OR "SILTSACK" AS MANUFACTURED BY ATLANTIC CONSTRUCTION FABRICS, INC. (800-448-3636).
CLEAN FILTER AS RECOMMENDED BY MANUFACTURER.

INLET FILTER BAG DETAIL

NOT TO SCALE

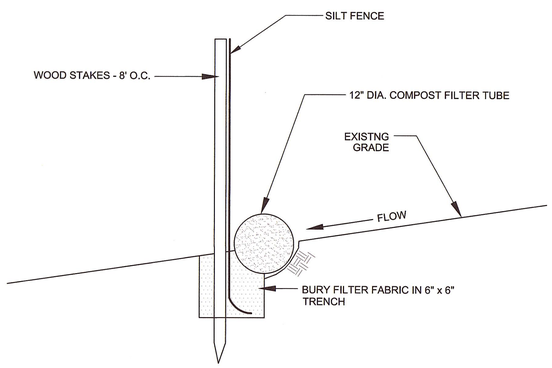

TEMPORARY SILT FENCE AND COMPOST FILTER TUBE DETAIL

NOT TO SCALE

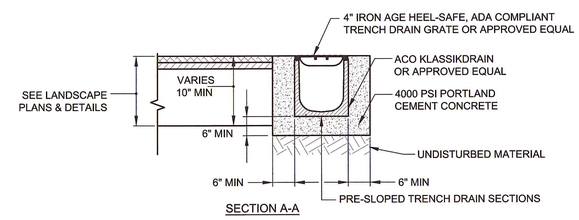

NOTES:

FRAME, GRATE AND STRUCTURE SHALL SUPPORT HS-20 LOADING WITHIN THE LOADING DOCK, AND H-20 LOADING AT ALL OTHER LOCATIONS

TRENCH DRAIN DETAIL

NOT TO SCALE

Project Architect:

Bergmeyer

Architecture and Interiors
Bergmeyer Associates, Inc.
55 Dorchester Street
Boston, MA 02210
Phone 617 542 1025
Fax 617 542 1069
www.bergmeyer.com

© Copyright 2016 Bergmeyer Associates, Inc.

COMMONWEALTH OF MASSACHUSETTS
LUKE L. BOUCHER
CIVIL
No. 47802
REGISTERED PROFESSIONAL ENGINEER
02-26-2016

Project Civil Engineer:

GREEN INTERNATIONAL AFFILIATES, INC.
Civil and Structural Engineers
239 Littleton Rd, Suite 3
Westford, Massachusetts
GreenIntl.com
(978) 923-0400

NO.	BY	DATE	DESCRIPTION
	KK	02.26.2016	PERMIT PLANS

MOUNT HOLYOKE COLLEGE COMMUNITY CENTER WITH DINING

50 College St, South Hadley, MA 01075

SITE DETAILS I

DRAWN BY:	KK
REVIEWED BY:	LB
JOB NO:	15040.002

C107

F:\Projects\2015\15040\dwg\Current Design\C107-Details.dwg

2/24/2016 9:22:21 PM

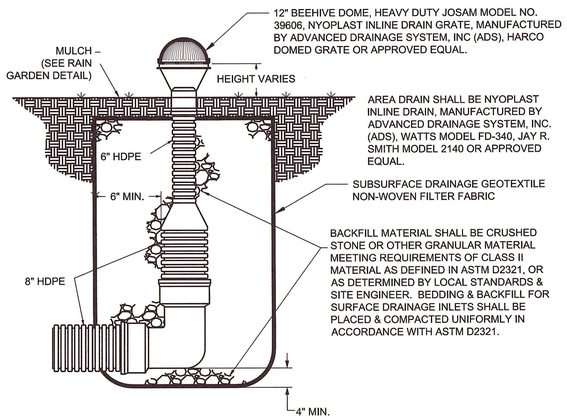

RAIN GARDEN AREA DRAIN DETAIL

NOT TO SCALE

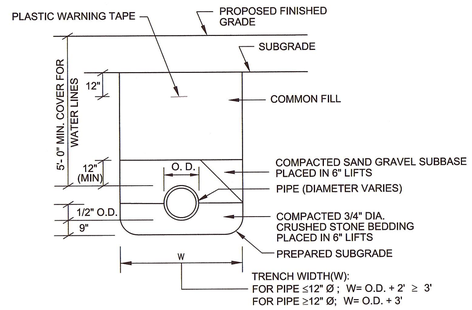

TRENCH EXCAVATION AND BACKFILLING:

1. EXCAVATE TRENCH BOTTOMS AS INDICATED. REMOVE STONES AND SHARP OBJECTS TO AVOID POINT LAODING. PLACE CRUSHED STONE PIPE BEDDING AS INDICATED.
2. NOTIFY ENGINEER WHEN EXCAVATIONS HAVE REACHED REQUIRED SUBGRADE. DO NOT PROCEED WITH UTILITY INSTALLATION UNTIL SUBGRADE IS APPROVED.
3. RECONSTRUCT SUBGRADES DAMAGED BY FREEZING TEMPERATURES, FROST, RAIN, ACCUMULATED WATER, OR CONSTRUCTION ACTIVITIES.
4. PLACE AND COMPACT INITIAL BACK FILL OF SAND-GRAVEL MATERIAL, FREE OF PARTICLES GREATER THAN 1 INCH, TO A HEIGHT OF 12" ABOVE THE UTILITY LINE OR CONDUIT.
5. CAREFULLY COMPACT MATERIAL UNER PIPE HAUNCHES AND BACKFILL EVENLY ON BOTH SIDES ALONG FULL LENGTH OF LINE TO AVOID DAMAGE OR DISPLACEMENT OF UTILITY SYSTEM.
6. COMPACT TRENCH BACKFILL IN 6" LIFTS WITH A HAND OPERATED (VIBRATOR PLATE) TAMPER AS FOLLOWS: UNDER PAVEMENT AND STRUCTURES; TO 95% MAX. DRY DENSITY PER ASTM D1557. UNDER LAWNS; 90% MAXIMUM DRY DENSITY PER ASTM D1557.

PIPE TRENCH DETAIL

NOT TO SCALE

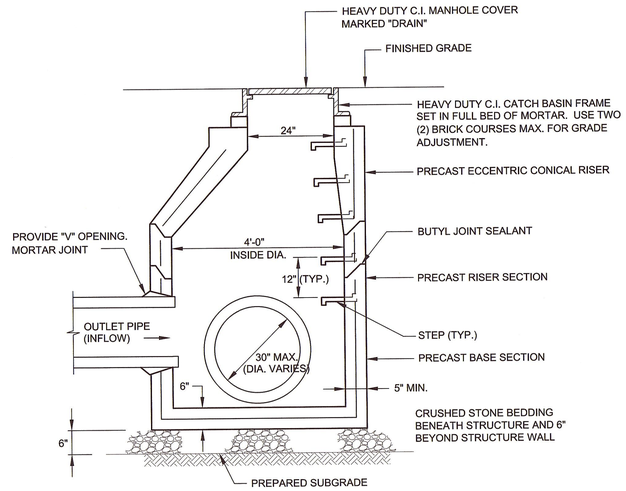

NOTE:

1. PRECAST CONCRETE SECTIONS SHALL CONFORM TO ASTM C-478
2. STEEL REINFORCING SHALL CONFORM TO ASTM A185
   MANHOLE STEPS SHALL BE 14" WIDE STEEL REINFORCED COPOLYMER POLYPROPYLENE PLASTIC AND SHALL BE CAST INTO MANHOLE SECTIONS BY THE PRECAST MANHOLE MANUFACTURER.

DRAIN MANHOLE DETAIL

NOT TO SCALE

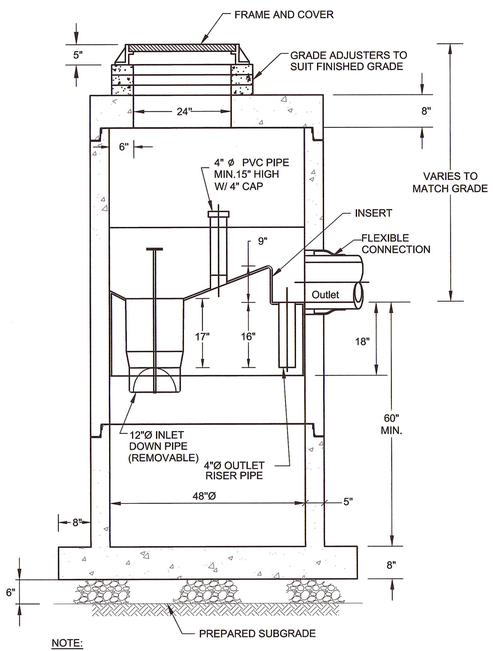

NOTE:

1. THE FRAME AND COVER SHOULD BE POSITIONED OVER THE INLET DROP PIPE AND THE OIL PORT.

WATER QUALITY STRUCTURE DETAIL

NOT TO SCALE

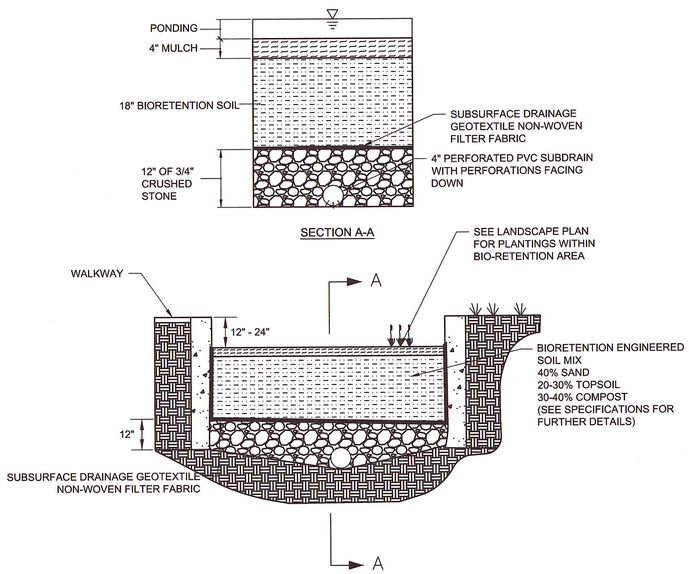

RAIN GARDEN DETAIL

NOT TO SCALE

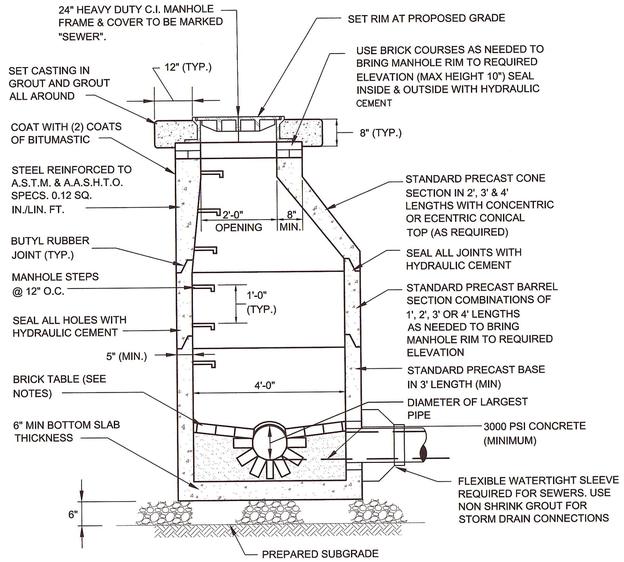

NOTE:

1. INNER EDGE OF BRICK TABLE TO BE AT ELEV OF CROWN OF TOP OF PIPE. TABLE TO SLOPE AT 1" PER 1' TO INSIDE OF MANHOLE BASE.
2. DESIGN PRECAST SECTIONS FOR H2O LOADING.

SEWER MANHOLE DETAIL

NOT TO SCALE

Project Architect:

Bergmeyer

© Copyright 2016 Bergmeyer Associates, Inc.

Architecture and Interiors
Bergmeyer Associates, Inc.
51 Sleeper Street
Boston, MA 02210
Phone 617 542 1005
Fax 617 542 1006
www.bergmeyer.com

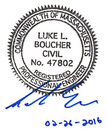

03-24-2016

Project Civil Engineer:

GREEN INTERNATIONAL AFFILIATES, INC.
Civil and Structural Engineers
239 Littleton Rd, Suite 3
Westford, Massachusetts
GreenIntl.com
(978) 923-0400

NO.	BY	DATE	DESCRIPTION
	KK	02.26.2016	PERMIT PLANS

MOUNT HOLYOKE COLLEGE COMMUNITY CENTER WITH DINING

50 College St, South Hadley, MA 01075

SITE DETAILS II

DRAWN BY:	KK
REVIEWED BY:	LB
JOB NO:	15040.002

C108

2/25/2016 8:16:54 AM F:\Projects\2015\15040\dwg\Current Design\C107-Details.dwg

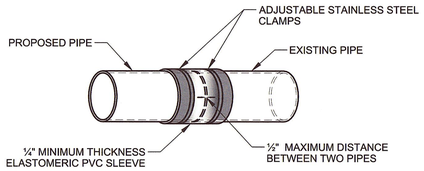

NOTE:

THE PROPOSED PIPE MAY HAVE AN OUTSIDE DIAMETER (O.D.) THAT IS DIFFERENT THAN THE O.D. OF THE EXISTING PIPE. THE CONTRACTOR SHALL VERIFY THE O.D. PRIOR TO ORDERING THE COUPLING.

TYPICAL SEWER AND DRAIN COUPLING DETAIL

NOT TO SCALE

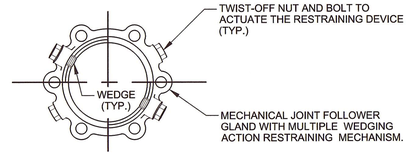

NOTE:

1. GLANDS SHALL BE DUCTILE IRON CONFORMING TO A.S.T.M. A 536-80 STEEL.
2. DIMENSIONS OF THE GLAND SHALL BE SUCH THAT IT CAN BE USED WITH THE STANDARDIZED MECHANICAL JOINT BELL AND TEE-HEAD BOLTS CONFORMING TO A.N.S.I./A.W.W.A. A 21.11 AND A.N.S.I./A.W.W.A. C 153/A 21.53 OF LATEST REVISION.

MECHANICAL JOINT RESTRAINT DETAIL

NOT TO SCALE

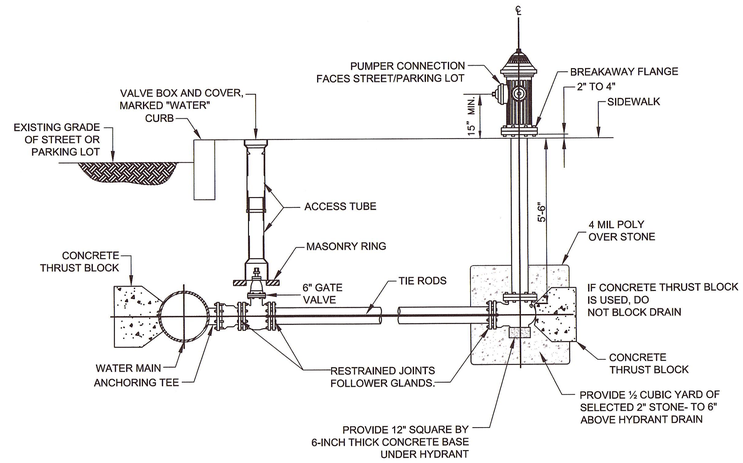

HYDRANT DETAIL

NOT TO SCALE

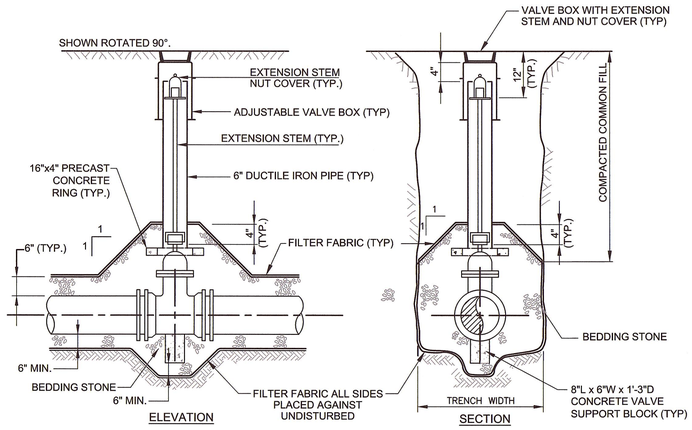

TYPICAL BURIED GATE VALVE

NOT TO SCALE

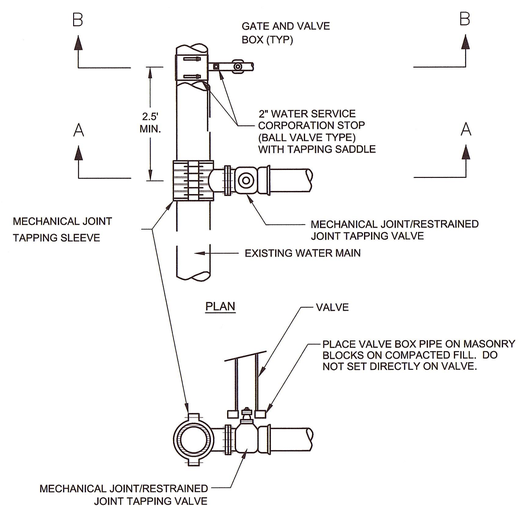

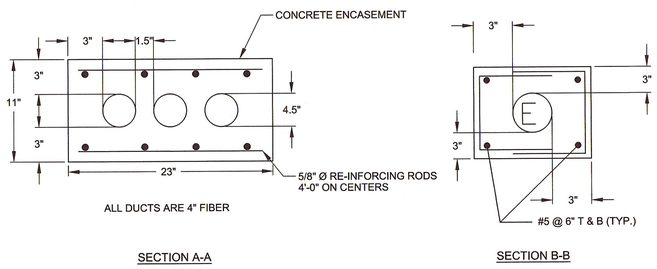

NOTE:

1. CONDUIT ENCASED IN CONCRETE WITH 30" MIN OF COVER.

ELECTRICAL DUCT BANK

NOT TO SCALE

PIPE SIZE	6"		8"		10"/12"	
DIMENSION	B	D	B	D	B	D
TEE/PLUG	2	2	3	3	4	4
90°	2	2	3	3	4	4
45°	2	2	2	2	4	4
22 1/2°	2	2	2	2	3	3

THRUST BLOCK SCHEDULE

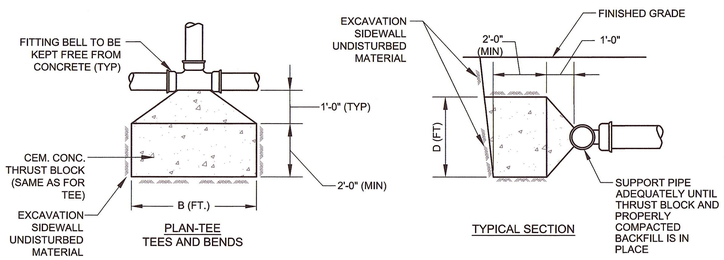

THRUST BLOCK DETAIL

NOT TO SCALE

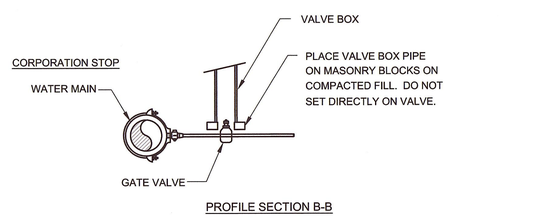

TYPICAL TAPPING SLEEVE & VALVE AND CORPORATION STOP DETAIL

NOT TO SCALE

Project Architect:

Bergmeyer

© Copyright 2016 Bergmeyer Associates, Inc.

Architecture and Interiors
Bergmeyer Associates, Inc.
131 Oliver Street
Boston, MA 02210
Phone 617 542 1005
Fax 617 542 1026
www.bergmeyer.com

Project Civil Engineer:

GREEN INTERNATIONAL AFFILIATES, INC.
Civil and Structural Engineers
239 Littleton Rd, Suite 3
Westford, Massachusetts
GreenIntl.com
(978) 923-0400

NO.	BY	DATE	DESCRIPTION
	KK	02.26.2016	PERMIT PLANS

MOUNT HOLYOKE COLLEGE COMMUNITY CENTER WITH DINING

50 College St, South Hadley, MA 01075

SITE DETAILS III

DRAWN BY:	KK
REVIEWED BY:	LB
JOB NO:	15040.002

C109

F:\Projects\2015\15040\dwg\Current Design\C107-Details.dwg

2/24/2016 9:41:23 PM

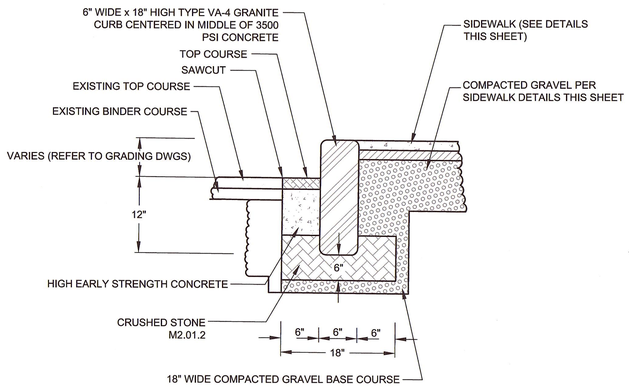

GRANITE CURB DETAIL

NOT TO SCALE

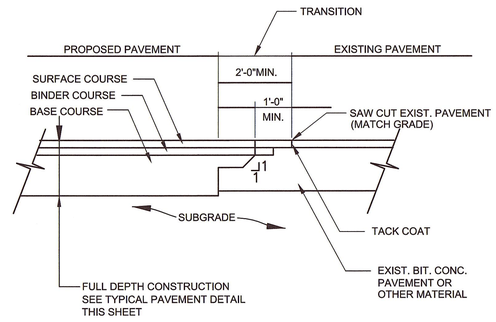

SAW CUT DETAIL

NOT TO SCALE

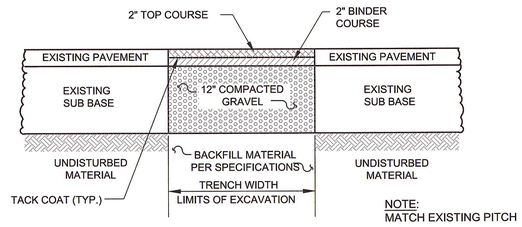

NOTES:

1. THE CONTRACTOR SHALL MAINTAIN TEMPORARY PAVEMENT FOR 60-90 DAYS MINIMUM.
2. IF TEMPORARY PAVEMENT IS PLACED AFTER OCTOBER 1ST, THEN IT SHALL BE MAINTAINED UNTIL APRIL 15 OF THE FOLLOWING YEAR.
3. PERMANENT PAVEMENT SHALL BE PLACED BETWEEN APRIL 15 AND DECEMBER 1 OF EACH CALENDAR YEAR.

TEMPORARY TRENCH PAVEMENT

NOT TO SCALE

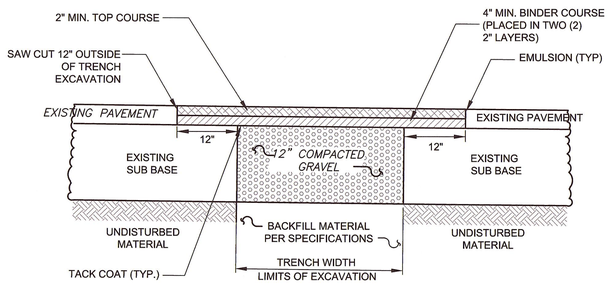

NOTE:

MATCH EXISTING PITCH

PERMANENT PAVEMENT DETAIL

NOT TO SCALE

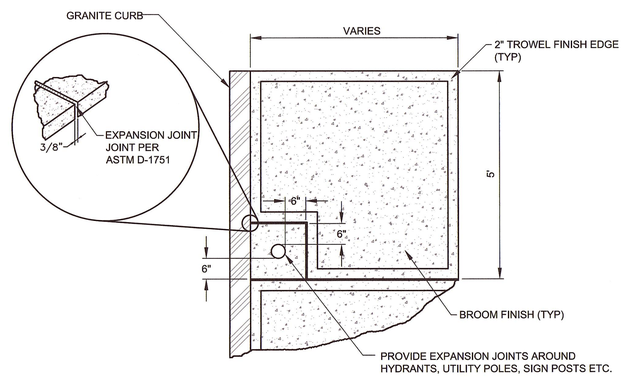

CONCRETE SIDEWALK AND EXPANSION JOINT

NOT TO SCALE

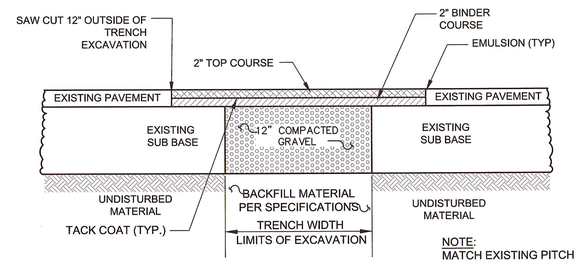

NOTES:

1. THE CONTRACTOR SHALL SAW CUT 12-INCHES OUTSIDE OF TRENCH EXCAVATION. TEMPORARY PAVEMENT SHALL BE REMOVED AND DISPOSED OF. THE GRAVEL SHALL BE FINE GRADED, EMULSION PLACED ON ALL JOINTS, AND PERMANENT PAVEMENT PLACED IN TWO COURSES.
2. CONTRACTOR SHALL MATCH EXISTING ROADWAY GRADES

PERMANENT TRENCH PAVEMENT

NOT TO SCALE

LEGEND

HSL = HIGH SIDE TRANSITION LENGTH (SEE MHD STD DETAIL M/E 107.9.0)

W = SIDEWALK WIDTH

Wc = CURB WIDTH

* = TOLERANCE FOR CONSTRUCTION ±0.5%

USABLE SIDEWALK WIDTH PER AAB = W-Wc
USABLE SIDEWALK WIDTH PER AAB IS NOT TO BE LESS THAN 4'-0"

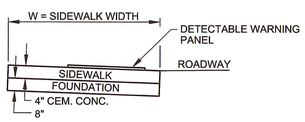

SECTION A-A

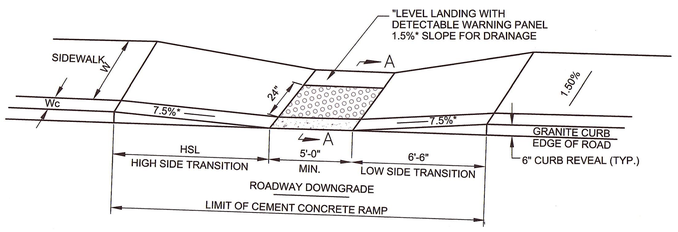

ACCESSIBLE CURB RAMP WITH DETECTABLE WARNING PANEL

NOT TO SCALE

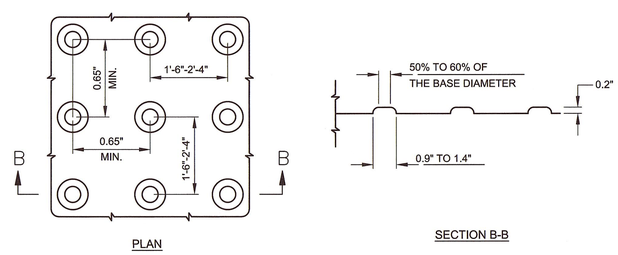

PLAN

SECTION B-B

NOTES:

1. THE DETECTABLE WARNING STRIP SHALL BE A PREFABRICATED DETECTABLE WARNING SURFACE TILE FOR THE APPLICATION DESIGNATED MEETING THE REQUIREMENTS AND SPECIFICATIONS OF THE CITY OF LOWELL AND MASSACHUSETTS HIGHWAY DEPARTMENT.
2. TILES SHALL BE MANUFACTURED BY CITY OF LOWELL APPROVED SUPPLIERS.

DETECTABLE WARNING PANEL

NOT TO SCALE

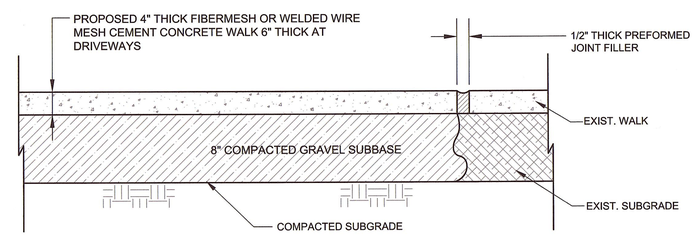

NOTES:

1. ALL WORK SHALL BE COMPLETED IN ACCORDANCE THE LATEST VERSION OF THE CITY OF LOWELL STANDARD SPECIFICATIONS FOR STREET EXCAVATIONS AND CONSTRUCTION.
2. CEMENT CONCRETE FOR WALKWAYS SHALL HAVE A 28-DAY COMPRESSIVE STRENGTH OF 4,000 PSI WITH 6% AIR-ENTRAINMENT AND MINIMUM CEMENT CONTENT OF 610 LBS/C.Y.
3. CONCRETE SHALL BE PLACED IN ALTERNATE SLABS 30 FEET IN LENGTH. THE SLABS SHALL BE SEPARATED BY TRANSVERSE PREFORMED EXPANSION JOINT FILLER (AASHTO M-213-65) ½" IN THICKNESS.
4. PREFORMED EXPANSION JOINT FILLER SHALL BE PLACED ADJACENT TO OR AROUND EXISTING STRUCTURES AND WALKWAYS.
5. AFTER CONSOLIDATION, CONCRETE DEPTH SHALL BE 4 INCHES IN DEPTH EXCEPT AT DRIVEWAYS WHERE DEPTH SHALL BE 6".
6. ENSURE THAT NO BLED WATER OR WATER SHEEN EXISTS ON THE SURFACE OF THE CONCRETE AND THAT CONCRETE HAS STARTED TO STIFFEN BEFORE ANY FINISHING OPERATIONS ARE PERFORMED.
7. AFTER TROWELING, SURFACE SHALL BE BRUSHED BY DRAWING A SOFT-BRISTLED PUSHBROOM WITH A LONG HANDLE OVER THE SURFACE OF THE CONCRETE TO PRODUCE A NON-SLIP SURFACE.
8. THE SURFACE OF ALL CONCRETE SHALL BE UNIFORMLY SAWCUT INTO BLOCK UNITS OF AREAS NOT MORE THAN 36 SQUARE FEET. THE DEPTH SHALL BE AT LEAST 1 ½".
9. THE FINISHING OF CONCRETE SURFACE SHALL BE DONE BY EXPERIENCED AND COMPETENT CEMENT FINISHERS.
10. WHEN COMPLETED, WALKWAYS SHALL BE KEPT MOIST AND PROTECTED FROM TRAFFIC AND WEATHER FOR AT LEAST 3 DAYS.
11. WELDED WIRE MESH SHALL BE 6"x6" No. 10 GAUGE AND SHALL BE SHEET MESH ONLY NOT ROLLED. MESH SHALL REST ON CONCRETE BLOCKS AND BE INSTALLED AT MID DEPTH IN CONCRETE.

CEMENT CONCRETE WALKWAY AND PATCH DETAIL

NOT TO SCALE

Project Architect:

Bergmeyer

© Copyright 2016 Bergmeyer Associates, Inc.

Architecture and Interiors
Bergmeyer Associates, Inc.
41 Berkeley Street
Boston, MA 02210
Phone 617 542-1005
Fax 617 542-1009
www.bergmeyer.com

COMMONWEALTH OF MASSACHUSETTS
LUKE L. BOLICHER
CIVIL
No. 47802
REGISTERED PROFESSIONAL ENGINEER

02-26-2016

Project Civil Engineer:

GREEN INTERNATIONAL AFFILIATES, INC.
Civil and Structural Engineers
239 Littleton Rd, Suite 3
Westford, Massachusetts
GreenIntl.com
(978) 923-0400

NO.	BY	DATE	DESCRIPTION
	KK	02.26.2016	PERMIT PLANS

MOUNT HOLYOKE COLLEGE COMMUNITY CENTER WITH DINING

50 College St, South Hadley, MA 01075

SITE DETAILS IV

DRAWN BY:	KK
REVIEWED BY:	LB
JOB NO:	15040.002

C110

2/24/2016 9:44:31 PM F:\Projects\2015\15040\dwg\Cumall Design\C107-Details.dwg

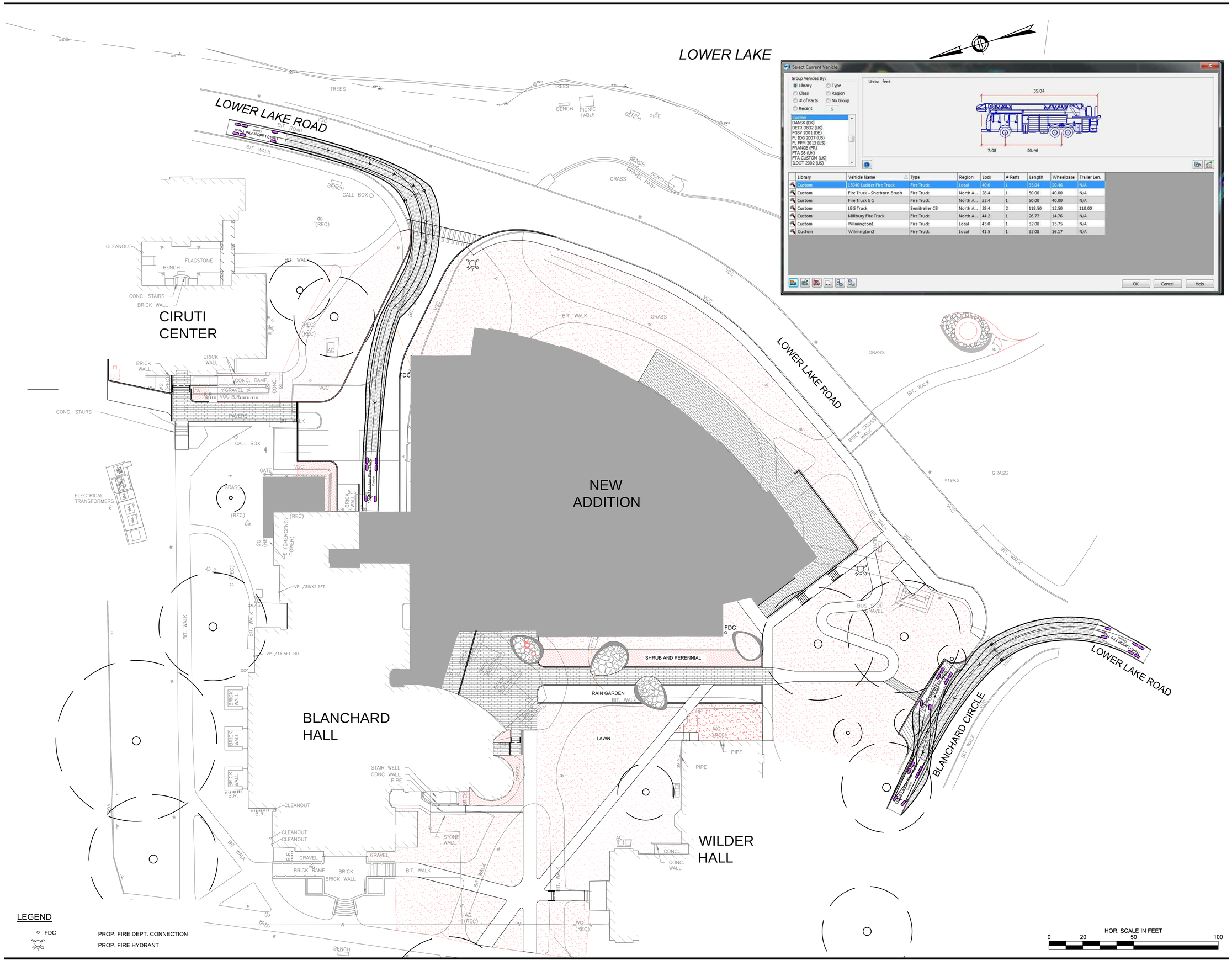

Library	Vehicle Name	Type	Region	Lock	# Parts	Length	Wheelbase	Trailer Len.
Custom	15040 Ladder Fire Truck	Fire Truck	Local	40.6	1	35.04	20.46	N/A
Custom	Fire Truck - Sherborn Brush	Fire Truck	North A...	28.4	1	50.00	40.00	N/A
Custom	Fire Truck E-1	Fire Truck	North A...	32.4	1	50.00	40.00	N/A
Custom	LBG Truck	Semitrailer CB	North A...	28.4	2	118.50	12.50	110.00
Custom	Millbury Fire Truck	Fire Truck	North A...	44.2	1	26.77	14.76	N/A
Custom	Wilmington1	Fire Truck	Local	45.0	1	32.08	15.75	N/A
Custom	Wilmington2	Fire Truck	Local	41.5	1	32.08	16.17	N/A

F:\Projects\2015\15040\dwg\Current Design\Fire Dept Access Plan.dwg

2/25/2016 8:58:52 AM

Bergmeyer

Architecture and Interiors
Bergmeyer Associates, Inc.
53 State Street
Boston, MA 02210
Phone 617 542-7025
Fax 617 542-7605
www.bergmeyer.com

© Copyright 2016 Bergmeyer Associates, Inc.

Project Civil Engineer:

GREEN INTERNATIONAL AFFILIATES, INC.
Civil and Structural Engineers
239 Littleton Rd, Suite 3
Westford, Massachusetts
GreenIntl.com
(978) 923-0400

NO.	BY	DATE	DESCRIPTION
	KK	02.26.2016	PERMIT PLANS

MOUNT HOLYOKE COLLEGE
COMMUNITY CENTER WITH DINING

50 College St, South Hadley, MA 01075

FIRE DEPARTMENT ACCESS PLAN

DRAWN BY:	KK
REVIEWED BY:	LB
JOB NO:	15040.002

FD101

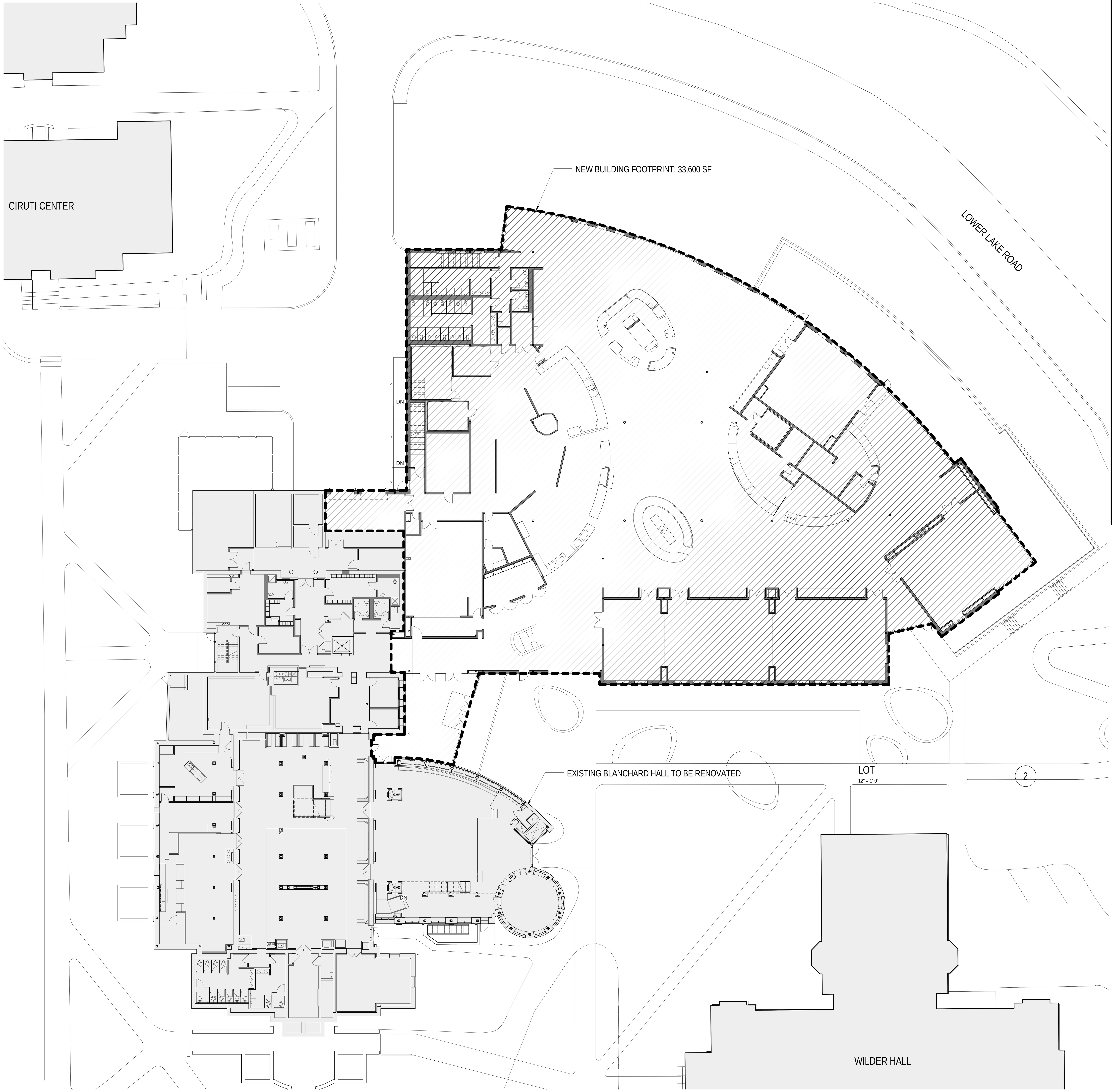

1 ARCHITECTURAL SITE PLAN
1/16" = 1'-0"

DIMENSIONAL REGULATIONS SCHEDULE

SOUTH HADLEY ZONING BYLAWS - SECTION 6(B)

RESIDENCE A-2 ZONING DISTRICT
THE BUILDING FALLS ON LOTS 21 & 35, WITH SOME SITEWORK ON LOT 18.

	REQUIRED:	*PROPOSED:*
MINIMUM LOT AREA	12,500 SF	24.7 ACRES TOTAL
LOT 18		*2.2 ACRES*
LOT 21		*6.2 ACRES*
LOT 35		*16.3 ACRES*
MINIMUM LOT FRONTAGE	100 FT	MIN. 100 FT
MAX. BUILDING COVER %	40%	3.4%
NEW BUILDING FOOTPRINT		*33,600 SF = .77 ACRES*
MAX. IMPERVIOUS COVER %	65%	10% *(114,519 SF)*
MINIMUM YARD SETBACK:		
FRONT	25	ALL LOTS OWNED BY SAME
SIDE	10	PROPERTY OWNER (MOUNT
REAR	20	HOLYOKE COLLEGE) - N/A
MAXIMUM HEIGHT (COLLEGES):		
STORIES	6	1 STORY + PENTHOUSE
FEET	60	TALLEST POINT: 47'-2" (SEE A201)

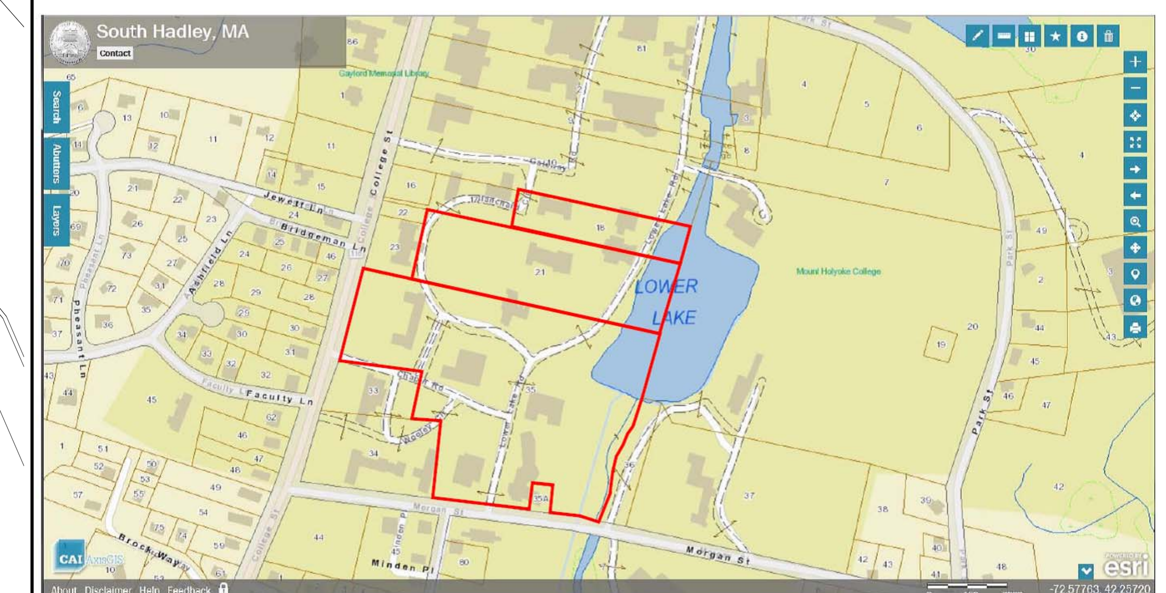

Bergmeyer
Architecture and Interiors
Bergmeyer Associates, Inc.
51 Sleeper Street
Boston, MA 02210
Phone 617 542 1025
Fax 617 542 1026
www.bergmeyer.com

© Copyright 2016 Bergmeyer Associates, Inc.

NO.	BY	DATE	DESCRIPTION
	RL	02.26.2016	PERMIT PLANS

MOUNT HOLYOKE COLLEGE
COMMUNITY CENTER WITH DINING

50 College St, South Hadley, MA 01075

ARCHITECTURAL SITE PLAN

DRAWN BY:	Author
REVIEWED BY:	Checker
JOB NO:	15048.00

A100

C:\Users\rlanzafame\Desktop\LOCAL\15048_MT HOLYOKE_Central_rlanzafame.rvt

2/24/2016 3:09:32 PM

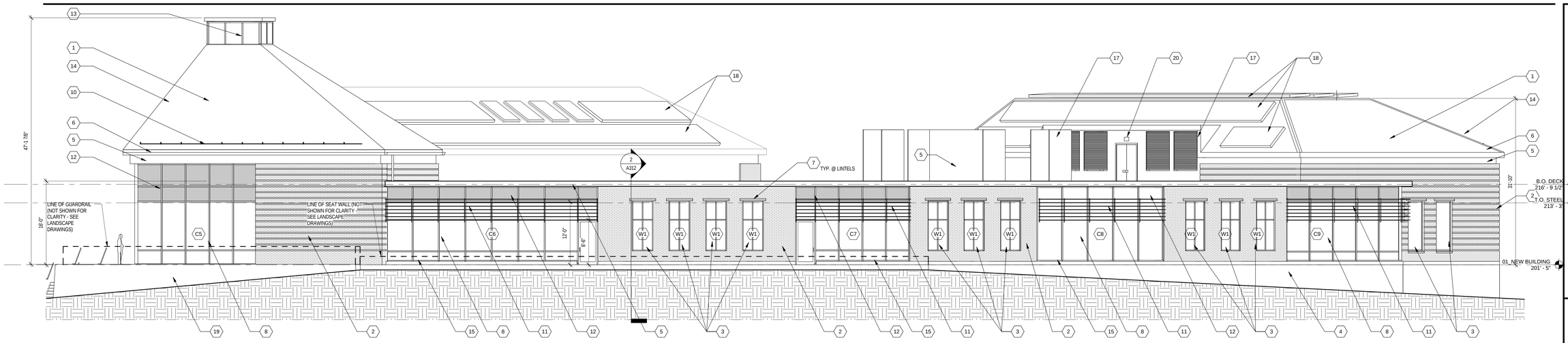

3 EXTERIOR ELEVATION 1
1/8" = 1'-0"

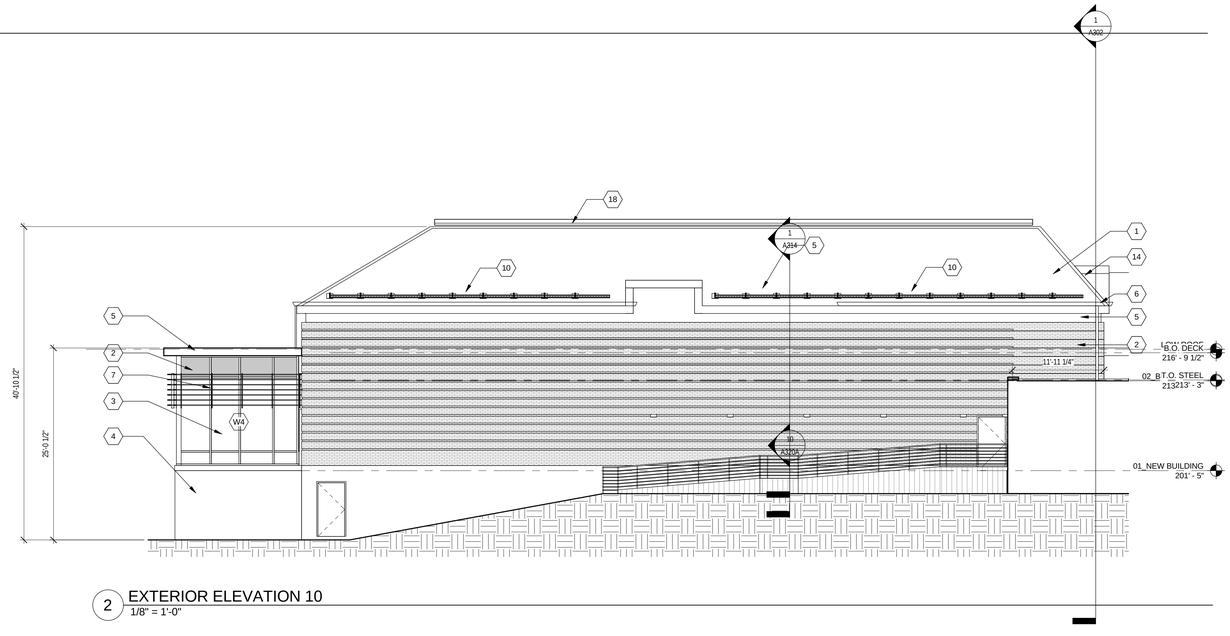

2 EXTERIOR ELEVATION 10
1/8" = 1'-0"

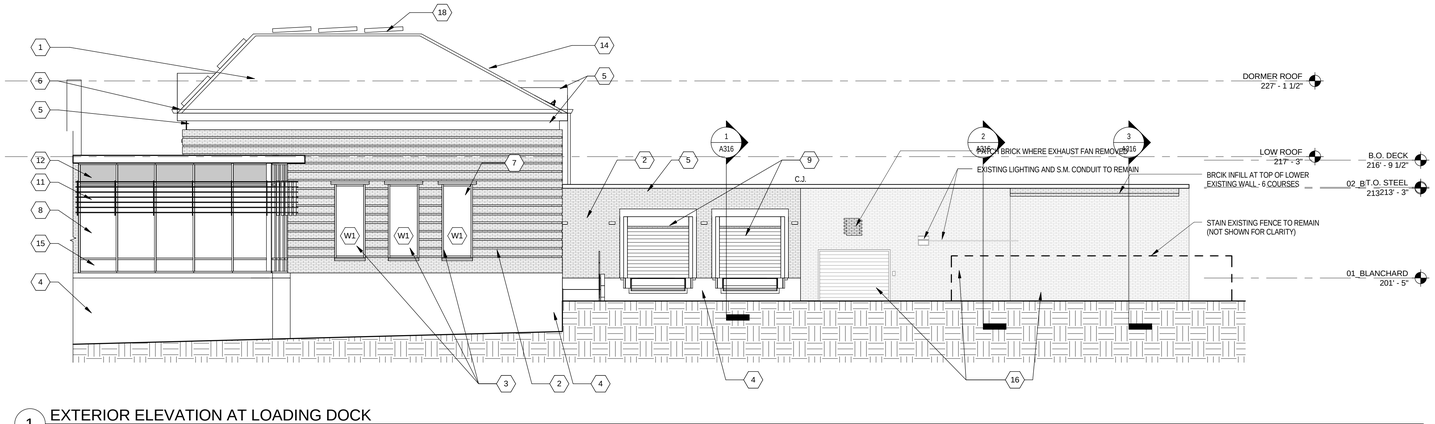

1 EXTERIOR ELEVATION AT LOADING DOCK
1/8" = 1'-0"

ELEVATION KEYNOTES

1. SYNTHETIC SLATE ROOFING
2. BRICK CAVITY WALL
3. PREFINISHED ALUMINUM STOREFRONT W/INSULATED GLAZING
4. FORMLINED (BOARD PATTERN) COLORED CONCRETE FOUNDATION WALLS
5. PREFINISHED METAL FASCIA
6. COPPER GUTTERS & DOWNSPOUTS
7. PRECAST ACCENT AT LINTEL AND SILL
8. PREFINISHED INSULATED 2" CURTAINWALL SYSTEM
9. LOADING DOCK DOOR W/DOCK SEAL, BUMPERS AND LEVELER
10. PREFINISHED ALUMINUM SNOW GUARD
11. FIXED WOOD-LOOK ALUMINUM SUNSHADE LOUVERS
12. INSULATED SPANDREL GLAZING TO CONCEAL STRUCTURE BEYOND
13. PREMANUFACTURED COPPER ROOF MONITOR W/INSULATED GLAZING
14. COPPER RIDGE ROLL, TYP. @ SYNTHETIC SLATE ROOFING
15. 32" TALL SPANDREL PANEL WITH INSULATED, PRE-FINISHED METAL PANEL AND HYDRONIC RADIATOR ENCLOSURE AT INTERIOR.
16. EXISTING EXTERIOR WALL AND OVERHEAD DOOR TO REMAIN
17. PREFINISHED MECHANICAL LOUVERS, SEE MECHANICAL DRAWINGS FOR SIZE
18. ANGLED SOLAR THERMAL PANELS
19. NATURAL STONE FACE WALL AT TERRACE
20. EXTERIOR SURFACE MOUNTED LIGHT FIXTURE

Bergmeyer

Architecture and Interiors
Bergmeyer Associates, Inc.
53 State Street, 20th Floor
Boston, MA 02210
Phone 617 542-1025
Fax 617 542-1629
www.bergmeyer.com

© Copyright 2016 Bergmeyer Associates, Inc.

NO.	BY	DATE	DESCRIPTION
	RL	02.26.2016	PERMIT PLANS
	RL	01.22.2016	30% DESIGN DEVELOPMENT

MOUNT HOLYOKE COLLEGE
COMMUNITY CENTER WITH DINING

50 College St, South Hadley, MA 01075

EXTERIOR ELEVATIONS - DINING

DRAWN BY:	RL
REVIEWED BY:	DF
JOB NO:	15048.00

A201

2/24/2016 3:09:42 PM C:\Users\farrazlaine\Desktop\LOCAL\15048_MT HOLYOKE_Central_farrazlaine.rvt

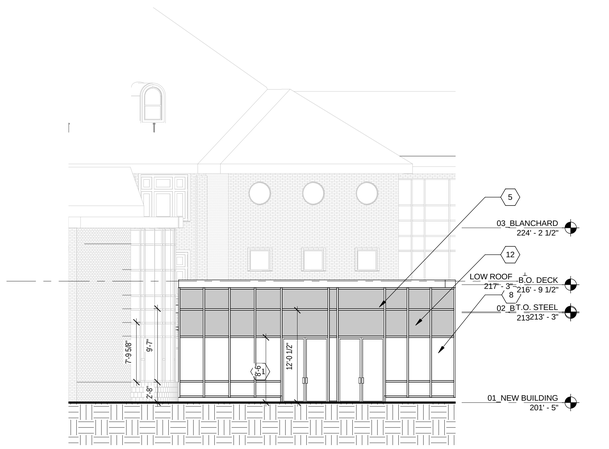

6 EXTERIOR ELEVATION 7
1/8" = 1'-0"

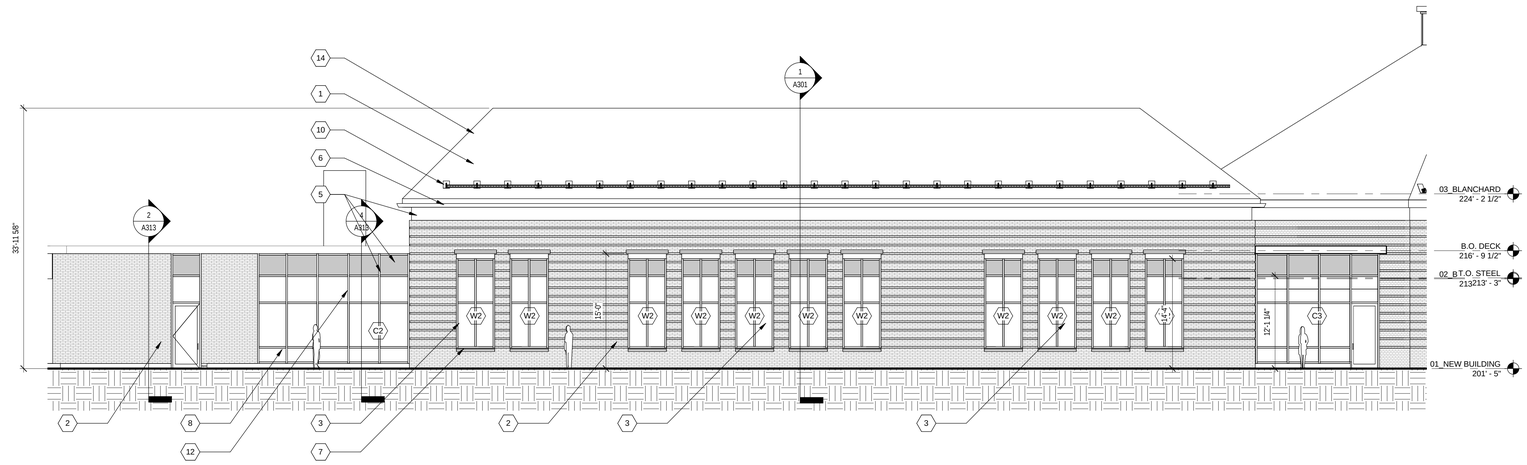

3 EXTERIOR ELEVATION 6
1/8" = 1'-0"

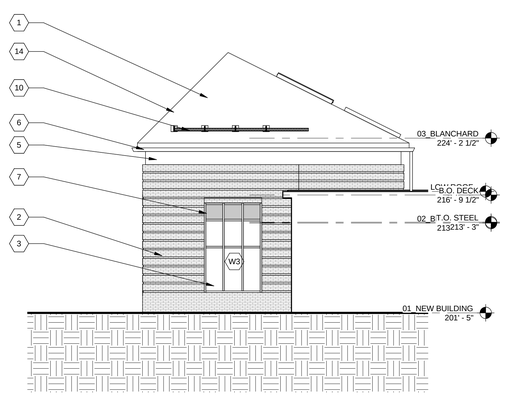

2 EXTERIOR ELEVATION 5
1/8" = 1'-0"

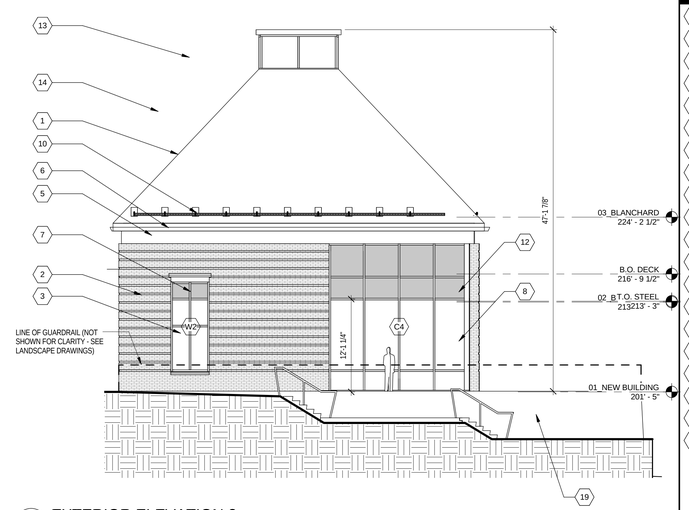

1 EXTERIOR ELEVATION 2
1/8" = 1'-0"

ELEVATION KEYNOTES

1. SYNTHETIC SLATE ROOFING
2. BRICK CAVITY WALL
3. PREFINISHED ALUMINUM STOREFRONT W/INSULATED GLAZING
4. FORMLINED (BOARD PATTERN) COLORED CONCRETE FOUNDATION WALLS
5. PREFINISHED METAL FASCIA
6. COPPER GUTTERS & DOWNSPOUTS
7. PRECAST ACCENT AT LINTEL AND SILL
8. PREFINISHED INSULATED 2" CURTAINWALL SYSTEM
9. LOADING DOCK DOOR W/DOCK SEAL, BUMPERS AND LEVELER
10. PREFINISHED ALUMINUM SNOW GUARD
11. FIXED WOOD-LOOK ALUMINUM SUNSHADE LOUVERS
12. INSULATED SPANDREL GLAZING TO CONCEAL STRUCTURE BEYOND
13. PREMANUFACTURED COPPER ROOF MONITOR W/INSULATED GLAZING
14. COPPER RIDGE ROLL, TYP. @ SYNTHETIC SLATE ROOFING
15. 32" TALL SPANDREL PANEL WITH INSULATED, PRE-FINISHED METAL PANEL AND HYDRONIC RADIATOR ENCLOSURE AT INTERIOR.
16. EXISTING EXTERIOR WALL AND OVERHEAD DOOR TO REMAIN
17. PREFINISHED MECHANICAL LOUVERS, SEE MECHANICAL DRAWINGS FOR SIZE
18. ANGLED SOLAR THERMAL PANELS
19. NATURAL STONE FACE WALL AT TERRACE
20. EXTERIOR SURFACE MOUNTED LIGHT FIXTURE

Bergmeyer

Architecture and Interiors
Bergmeyer Associates, Inc.
51 Sleeper Street
Boston, MA 02210
Phone 617 542-7025
Fax 617 542-7029
www.bergmeyer.com

© Copyright 2016 Bergmeyer Associates, Inc.

NO.	BY	DATE	DESCRIPTION
	RL	02.26.2016	PERMIT PLANS
	RL	01.22.2016	30% DESIGN DEVELOPMENT

MOUNT HOLYOKE COLLEGE COMMUNITY CENTER WITH DINING

50 College St, South Hadley, MA 01075

EXTERIOR ELEVATIONS - DINING

DRAWN BY:	RL
REVIEWED BY:	DF
JOB NO:	15048.00

A202

C:\Users\rlarzallame\Desktop\LOCAL\15048_MT.HOLYOKE_Central_rlarzallame.rvt

2/24/2016 3:09:50 PM